LIMITLESS LIGHTING

FABRIC CATALOGUE

PENTA

GRÜN BECK

DESIGNERS & INTERIORS

PENTA
BY AURALIS

Auralis è il primo polo industriale integrato, nell'ambito dell'illuminazione.

Una realtà tutta italiana, in grado di soddisfare ogni genere di esigenza di illuminazione, che si tratti di soluzioni tecniche indoor o outdoor, di progetti per il residenziale o per il contract, di collezioni di design contemporaneo o nell'ambito dei grandi classici. Un gruppo di eccellenze unico, verticale e completo, che definisce una nuova era del settore illuminotecnico, attraverso una forte propensione all'innovazione tecnologica, una costante ricerca della bellezza ed una missione ben chiara, volta alla promozione della cultura della luce come strumento per migliorare la qualità della vita delle persone.

–

Auralis is the first integrated industrial hub in the lighting field.

Auralis is an all-Italian reality that satisfies all kinds of lighting needs, whether it's indoor or outdoor technical solutions, residential and contract projects, contemporary design collections or just great classics. A unique, vertical and comprehensive group of excellence which defines a new era in the lighting sector through a strong drive for technological innovation, the pursuit for beauty, and a clear mission aimed at promoting the culture of light as a tool to improve the quality of people's lives.

AURALIS

PENTA CASTALDI ARREDOLUCE

Heritage, una collezione dove l’elemento paralume è protagonista, un classico made in Penta da riscoprire negli ambienti domestici. Tessuti, sospensioni e paralumi che hanno segnato l’inizio della nostra storia.
Ancora oggi li facciamo a mano con tessuti e passamanerie di pregio.

Heritage, a collection where the lampshade is the protagonist, a classic made in Penta to be rediscovered in the cosy setting of a home. Fabric, suspension lamps and lampshades that marked the beginning of our history.
As of today, we still produce each of them by hand, with precious fabrics and trimmings.

CONTENT

FLOOR / TABLE 11
CEILING / WALL 27

TECHNICAL
INFO 53

FLOOR / TABLE

BRIDGET pag. 12

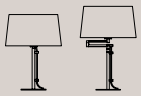

BRIDGET pag. 12

NEW CLASSIC pag. 16

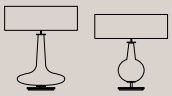

NEW CLASSIC pag. 16

TOSCA pag. 22

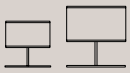

TOSCA pag. 22

CEILING / WALL

BRIDGET pag. 28

CLUB HOUSE pag. 30

CLUB HOUSE pag. 30

LUXURY pag. 34

SLIDE pag. 38

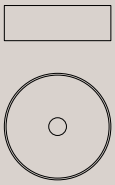

SOSPENSIONI pag. 42

SOSPENSIONI pag. 42

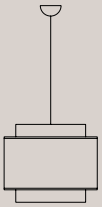

SOSPENSIONI pag. 42

VANITY pag. 48

FLOOR / TABLE

BRIDGET 12
NEW CLASSIC 16
TOSCA 22

BRIDGET

TECHNICAL INFO - P.54

Una famiglia di lampade dalla forte vocazione progettuale. Nella versione da tavolo dotata di braccio mobile, il paralume si può spostare in base alle esigenze rendendo Bridget la perfetta lampada da lettura.

—

A family of lamps with a strong design vocation. In the table version, it is equipped with an adjustable arm, so that the shade can be moved according to requirements, and Bridget becomes the perfect reading lamp.

1003-10 EXTENSIBLE FLOOR NICKEL SATIN – 1003-16 EXTENSIBLE ADJUSTABLE FLOOR NICKEL SATIN – 1003-92 FLOOR SHADE UNBLEACHED LINEN

1003-01 SMALL EXTENSIBLE TABLE – 1003-02 SMALL EXTENSIBLE ADJUSTABLE TABLE – 1003-91 SMALL SHADE WHITE LINEN, PEARL SILK

1003-03 LARGE EXTENSIBLE TABLE NICKEL SATIN – 1003-90 LARGE SHADE WHITE LINEN 1003-04 LARGE – EXTENSIBLE ADJUSTABLE TABLE NICKEL SATIN – 1003-90 LARGE SHADE PEARL SILK

NEW CLASSIC
UMBERTO ASNAGO
2003-2009

TECHNICAL INFO - P.75

Reinterpretazione sofisticata del classico abat-jour, New classic ha una base a bottiglia in vetro di diverse forme e un paralume in tessuto per un ulteriore tocco di modernità.

–

Glamorously reinventing the table lamp, New classic has a glass bottle in different shapes as a base and a shade of fabric for a fresh, contemporary look.

0204-10 BON TON FLOOR FUMÉ – 0200-93 LOW SEMICONE FLOOR SHADE TOBACCO SILK

0206-00 PASCIÀ TABLE FUMÉ – 0200-92 LOW CYLINDER TABLE SHADE BLACK LINEN

0205-00 DESIR TABLE FUMÉ

0204-00 BON TON TABLE FUMÉ – 0200-92 LOW CYLINDER TABLE SHADE BLUE MARINE SILK SATIN

TOSCA
UMBERTO ASNAGO
2006

TECHNICAL INFO - P.106

Un sostegno essenziale in metallo supporta un paralume rettangolare in tessuto in questa lampada da terra o da tavolo che mostra tutta l'eleganza della semplicità, per un effetto luminoso di grande atmosfera.

–

A minimal metal support sustains a rectangular fabric shade in this floor or table lamp which shows all the elegance of simplicity, for a light effect of great atmosphere.

0601-10 FLOOR ANTHRACITE – 0601-92 FLOOR SHADE SAND LINEN

0601-01 SMALL TABLE ANTHRACITE – 0601-91 SMALL SHADE UNBLEACHED LINEN – 0601-03 LARGE TABLE ANTHRACITE – 0601-90 LARGE SHADE UNBLEACHED LINEN

CEILING / WALL

BRIDGET 28
CLUB HOUSE 30
LUXURY 34
SLIDE 38
SOSPENSIONI 42
VANITY 48

BRIDGET

TECHNICAL INFO - P.54

Nella sua versione a parete, Bridget interpreta con carattere la luce d'ambiente, unendo funzionalità e presenza estetica. Pensata per accompagnare letture, momenti di relax o semplicemente per arricchire lo spazio, si integra con naturalezza in diversi contesti, dal domestico all'ospitalità.

–

In its wall-mounted version, Bridget brings character to ambient lighting, combining functionality with a strong visual presence. Designed to accompany reading, moments of relaxation, or simply to enrich the space, it blends naturally into a variety of settings, from residential to hospitality environments.

1003-31 WALL – 1003-91 SMALL SHADE WHITE LINEN

CLUB HOUSE

TECHNICAL INFO - P.60

Club House è una collezione dall'indole decorativa che rilegge con ironia il classico paralume in seta con passamaneria a contrasto.

–

Club House is a decorative collection that ironically reinterprets the classic silk shade with contrasting trimmings.

1402-24 TRENDY LARGE SUSPENSION COCCO LAWN

1402-20 Ø20 SUSP. – 1402-21 Ø25 SUSP. – 1402-22 Ø35 SUSP.: LIME GREEN LAWN, FANGO SILK SATIN

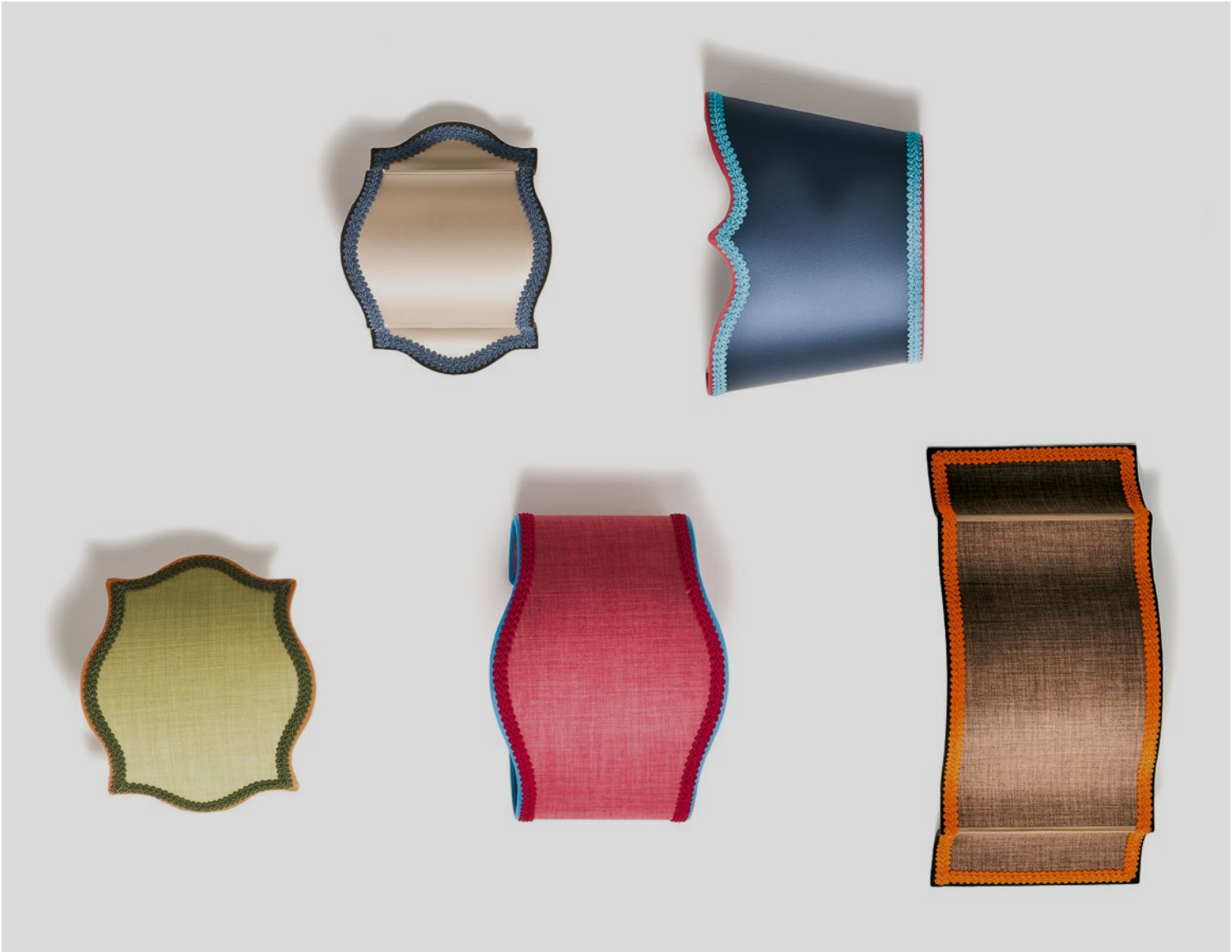

1402-30 31X14 – 1402-31 34X16 – 1402-32 33X17 – 1402-33 35X33 – 1402-34 52X18 : LIME GREEN LAWN, PEARL SILK SATIN, BLUE MARINE SILK SATIN, POMEGRANATE LAWN, COCCO LAWN

LUXURY

TECHNICAL INFO - P.68

Luxury è una sospensione in tessuto che si distingue per la particolare lavorazione a plissé, capace di donare profondità e dinamismo alla superficie. La texture ricca e materica crea interessanti giochi di luce, contribuendo a definire l'atmosfera dell'ambiente in cui viene inserita.

–

Luxury is a fabric pendant light that stands out for its distinctive pleated design, which adds depth and movement to the surface. The rich, textured finish creates captivating light effects, helping to shape the atmosphere of the surrounding space.

0607-21 SEMICONE Ø80 SUSPENSION TOBACCO SILK PLISSÉ

0607-20 SEMICONE Ø60 SUSPENSION WHITE SILK PLISSÉ

Proposta in tre varianti di forma — semiconica, cilindrica e rettangolare — Luxury si integra con facilità in contesti diversi, dal residenziale al contract.

—

Offered in three shape variants — semicone, cylinder, and rectangular — Luxury blends seamlessly into a variety of settings, from residential to contract spaces.

SLIDE

TECHNICAL INFO - P.82

Il cilindro basso in tessuto riletto in versione plafoniera, per gli spazi di casa e quelli del contract.

–

The short fabric cylinder in a wall lamp version, for home and public spaces.

0604-62 LARGE ROUND WALL-CEILING IVORY SILK

1005-42 LARGE SQUARE WALL-CEILING IVORY SILK – 1005-41 MEDIUM SQUARE WALL-CEILING IVORY SILK

Disponibile in tre diverse dimensioni, la lampada è proposta sia nella versione circolare che in quella quadrata, adattandosi con eleganza a qualsiasi ambiente.

—

Available in three different sizes, the lamp is offered in both round and square versions, elegantly adapting to any setting.

SOSPENSIONI

TECHNICAL INFO - P.88

Un oggetto dalle linee pulite che diventa protagonista dello spazio, esaltando attraverso la luce la morbidezza del tessuto.

–

An object with clean lines becomes the protagonist of the space, enhancing the softness of the fabric through light.

9229-25 CYLINDER Ø70 SUSPENSION CORD LAWN

9229-28 CYLINDER Ø60 SUSPENSION WHITE SILK, BLACK SILK

0604-22 LOW CYLINDER Ø100 SUSP. POMEGRANATE LAWN – 0604-21 LOW CYLINDER Ø80 SUSP. CORDA LAWN – 0604-20 LOW CYLINDER Ø60 SUSP. COCCO LAWN

VANITY

TECHNICAL INFO - P.110

La stessa morbida qualità della luce e la bellezza tattile delle sospensioni in tessuto in versione applique.

–

The same soft quality of light and the tactile beauty of the fabric suspensions, here in the wall lamp version.

9540-33 LARGE ROUND WHITE SILK – 9540-32 SMALL ROUND WHITE SILK

9540-31 LARGE RECTANGULAR WHITE SILK – 9540-30 SMALL RECTANGULAR WHITE SILK

Con le sue linee pulite e la finitura in tessuto, questa lampada è disponibile in due dimensioni e in due forme distintive — rotonda e rettangolare — rappresentando una scelta raffinata per valorizzare qualsiasi ambiente.

—

With its clean lines and soft textile finish, this lamp comes in two sizes and two distinct shapes — round and rectangular — making it a refined choice for enhancing any space.

TECHNICAL INFO

BRIDGET 54
CLUB HOUSE 60
LUXURY 68
NEW CLASSIC 75
SLIDE 82
SOSPENSIONI 88
TOSCA 106
VANITY 110

BRIDGET

1003-01
SMALL EXTENSIBLE TABLE

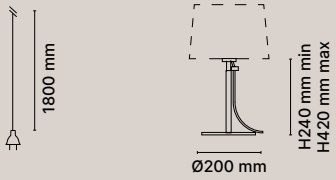

Peso / Weight: 1,7 kg

Dettagli
Details

1× 6W LED - E14
IP20

Paralumi venduti separatamente /
Shades sold separately

Struttura metallo Metal structure	Codice Code
Nickel satinato / Nickel satin	1003-01-2100-NXBE

Accessori Accessories	Codice Code
Lampadina / Bulb LED E14 - 2700K	RIC.000087

1003-02
SMALL EXTENSIBLE ADJUSTABLE TABLE

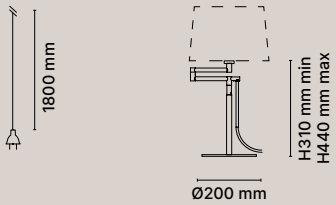

Peso / Weight: 1,7 kg

Dettagli
Details

1× 6W LED - E14
IP20

Paralumi venduti separatamente /
Shades sold separately

Struttura metallo Metal structure	Codice Code
Nickel satinato / Nickel satin	1003-02-2100-NXBE

Accessori Accessories	Codice Code
Lampadina / Bulb LED E14 - 2700K	RIC.000087

1003-03
LARGE EXTENSIBLE TABLE

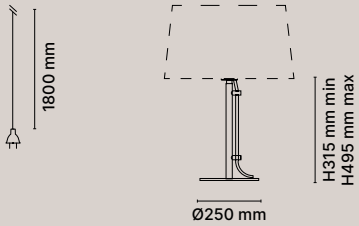

Peso / Weight: 2,5 kg

Dettagli
Details

1× 13W LED - E27
IP20

Paralumi venduti separatamente /
Shades sold separately

Struttura metallo Metal structure	Codice Code
Nickel satinato / Nickel satin	1003-03-2100-NXBE

Accessori Accessories	Codice Code
Lampadina / Bulb LED E27 - 2700K	RIC.000088

BRIDGET

1003-04
LARGE EXTENSIBLE ADJUSTABLE TABLE

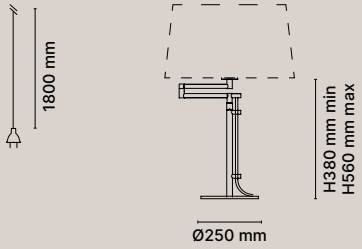

Peso / Weight: 2,5 kg

Dettagli
Details

1× 13W LED - E27
IP20

Paralumi venduti separatamente /
Shades sold separately

Struttura metallo Metal structure	Codice Code
Nickel satinato / Nickel satin	1003-04-2100-NXBE

Accessori Accessories	Codice Code
Lampadina / Bulb LED E27 - 2700K	RIC.000088

1003-31
WALL

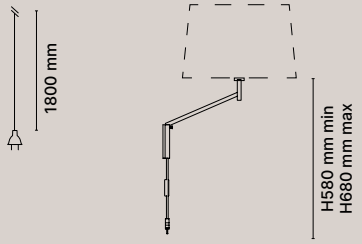

Peso / Weight: 0,7 kg

Dettagli
Details

1× 6W LED - E14
IP20

Paralumi venduti separatamente /
Shades sold separately

Struttura metallo Metal structure	Codice Code
Nickel satinato / Nickel satin	1003-31-2100-NXBE

Accessori Accessories	Codice Code
Lampadina / Bulb LED E14 - 2700K	RIC.000087

BRIDGET

1003-10
EXTENSIBLE FLOOR

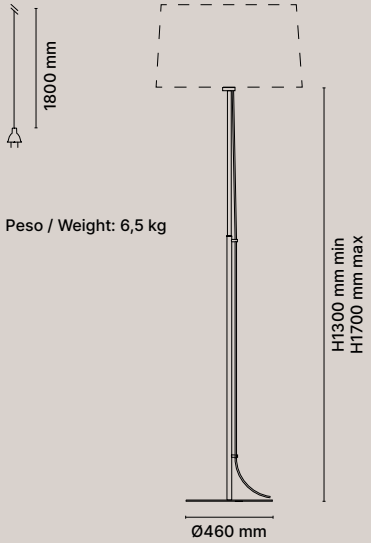

Peso / Weight: 6,5 kg

Dettagli
Details

1× 13W LED - E27
IP20

Paralumi venduti separatamente /
Shades sold separately

Struttura metallo Metal structure	Codice Code
Nickel satinato / Nickel satin	1003-10-2100-NXBE

Accessori Accessories	Codice Code
Lampadina / Bulb LED E27 - 2700K	RIC.000088

1003-16
EXTENSIBLE ADJUSTABLE FLOOR

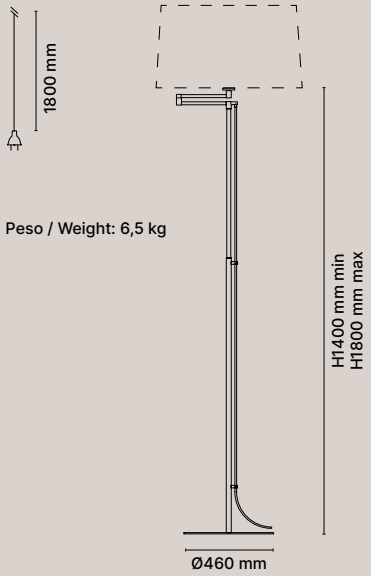

Peso / Weight: 6,5 kg

Dettagli
Details

1× 13W LED - E27
IP20

Paralumi venduti separatamente /
Shades sold separately

Struttura metallo Metal structure	Codice Code
Nickel satinato / Nickel satin	1003-16-2100-NXBE

Accessori Accessories	Codice Code
Lampadina / Bulb LED E27 - 2700K	RIC.000088

BRIDGET

1003-92
FLOOR SHADE

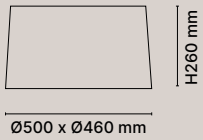

Peso / Weight: 0,5 kg

Dettagli
Details

Tessuti Cat. A /
Fabrics Cat. A
Tessuti Cat. B /
Fabrics Cat. B
Tessuti Cat. Extra /
Fabrics Cat. Extra

P. 114

Tessuti Fabrics	Codice Code
Pergamena bianco / White parchment	1003-92-0B11
Cotone verde bottiglia / Bottle green cotton	1003-92-0B05
Cotone amaranto / Reddish purple cotton	1003-92-0B04
Cotone marrone / Rrown cotton	1003-92-0B03
Cotone beige / Reige cotton	1003-92-0B02
Cotone bianco / White cotton	1003-92-0B01
Net avorio / Ivory net	1003-92-0A51
Linone tabacco / Tobacco lawn	1003-92-0A26
Linone blue denim / Blue denim lawn	1003-92-0A25
Linone verde lime / Lime green lawn	1003-92-0A24
Linone melograno / Pomegranate lawn	1003-92-0A23
Linone cocco / Cocco lawn	1003-92-0A22
Linone corda / Corda lawn	1003-92-0A21
Lino grezzo / Unbleached linen	1003-92-0A16
Lino melone / Melon linen	1003-92-0A15
Lino tortora / Tortora linen	1003-92-0A14
Lino sabbia / Sand linen	1003-92-0A13
Lino nero / Black linen	1003-92-0A12
Lino bianco / White linen	1003-92-0A11
Seta perla / Pearl silk	1003-92-0A07
Seta rosso / Red silk	1003-92-0A06
Seta tabacco / Tobacco silk	1003-92-0A05
Seta ambra / Amber silk	1003-92-0A04
Seta avorio / Ivory silk	1003-92-0A03
Seta nero / Black silk	1003-92-0A02
Seta bianco / White silk	1003-92-0A01
Raso blue marine / Blue marine silk satin	1003-92-0E06
Raso malva / Mauve silk satin	1003-92-0E03
Raso fango / Fango silk satin	1003-92-0E02
Raso madreperla / Pearl silk satin	1003-92-0E01

BRIDGET

1003-91
SMALL SHADE

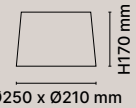

Peso / Weight: 0,3 kg

Dettagli Details	Tessuti Fabrics	Codice Code
Tessuti Cat. A / Fabrics Cat. A Tessuti Cat. B / Fabrics Cat. B Tessuti Cat. Extra / Fabrics Cat. Extra P. 114	Pergamena bianco / White parchment	1003-91-0B11
	Cotone verde bottiglia / Bottle green cotton	1003-91-0B05
	Cotone amaranto / Reddish purple cotton	1003-91-0B04
	Cotone marrone / Rrown cotton	1003-91-0B03
	Cotone beige / Reige cotton	1003-91-0B02
	Cotone bianco / White cotton	1003-91-0B01
	Net avorio / Ivory net	1003-91-0A51
	Linone tabacco / Tobacco lawn	1003-91-0A26
	Linone blue denim / Blue denim lawn	1003-91-0A25
	Linone verde lime / Lime green lawn	1003-91-0A24
	Linone melograno / Pomegranate lawn	1003-91-0A23
	Linone cocco / Cocco lawn	1003-91-0A22
	Linone corda / Corda lawn	1003-91-0A21
	Lino grezzo / Unbleached linen	1003-91-0A16
	Lino melone / Melon linen	1003-91-0A15
	Lino tortora / Tortora linen	1003-91-0A14
	Lino sabbia / Sand linen	1003-91-0A13
	Lino nero / Black linen	1003-91-0A12
	Lino bianco / White linen	1003-91-0A11
	Seta perla / Pearl silk	1003-91-0A07
	Seta rosso / Red silk	1003-91-0A06
	Seta tabacco / Tobacco silk	1003-91-0A05
	Seta ambra / Amber silk	1003-91-0A04
	Seta avorio / Ivory silk	1003-91-0A03
	Seta nero / Black silk	1003-91-0A02
	Seta bianco / White silk	1003-91-0A01
	Raso blue marine / Blue marine silk satin	1003-91-0E06
	Raso malva / Mauve silk satin	1003-91-0E03
	Raso fango / Fango silk satin	1003-91-0E02
	Raso madreperla / Pearl silk satin	1003-91-0E01

BRIDGET

1003-90
LARGE SHADE

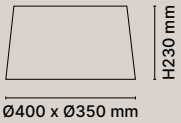

Peso / Weight: 0,3 kg

Dettagli Details	Tessuti Fabrics	Codice Code
Tessuti Cat. A / Fabrics Cat. A Tessuti Cat. B / Fabrics Cat. B Tessuti Cat. Extra / Fabrics Cat. Extra P. 114	Pergamena bianco / White parchment	1003-90-0B11
	Cotone verde bottiglia / Bottle green cotton	1003-90-0B05
	Cotone amaranto / Reddish purple cotton	1003-90-0B04
	Cotone marrone / Rrown cotton	1003-90-0B03
	Cotone beige / Reige cotton	1003-90-0B02
	Cotone bianco / White cotton	1003-90-0B01
	Net avorio / Ivory net	1003-90-0A51
	Linone tabacco / Tobacco lawn	1003-90-0A26
	Linone blue denim / Blue denim lawn	1003-90-0A25
	Linone verde lime / Lime green lawn	1003-90-0A24
	Linone melograno / Pomegranate lawn	1003-90-0A23
	Linone cocco / Cocco lawn	1003-90-0A22
	Linone corda / Corda lawn	1003-90-0A21
	Lino grezzo / Unbleached linen	1003-90-0A16
	Lino melone / Melon linen	1003-90-0A15
	Lino tortora / Tortora linen	1003-90-0A14
	Lino sabbia / Sand linen	1003-90-0A13
	Lino nero / Black linen	1003-90-0A12
	Lino bianco / White linen	1003-90-0A11
	Seta perla / Pearl silk	1003-90-0A07
	Seta rosso / Red silk	1003-90-0A06
	Seta tabacco / Tobacco silk	1003-90-0A05
	Seta ambra / Amber silk	1003-90-0A04
	Seta avorio / Ivory silk	1003-90-0A03
	Seta nero / Black silk	1003-90-0A02
	Seta bianco / White silk	1003-90-0A01
	Raso blue marine / Blue marine silk satin	1003-90-0E06
	Raso malva / Mauve silk satin	1003-90-0E03
	Raso fango / Fango silk satin	1003-90-0E02
	Raso madreperla / Pearl silk satin	1003-90-0E01

CLUB HOUSE

1402-20
Ø20 SUSPENSION

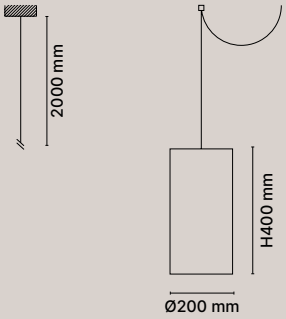

Peso / Weight: 0,9 kg

Dettagli
Details

1× 13W LED - E27
IP20

Linone e raso di seta con passamaneria a contrasto e cavo elettrico colorato /
Lawn and silk satin with clashing trimmings and colored fabric wire

P. 114

Tessuti Fabrics	Codice Code
Linone blue denim / Blue denim lawn	1402-20-0C01-N2BE
Linone melograno / Pomegranate lawn	1402-20-0C02-N2BE
Linone verde lime / Lime green lawn	1402-20-0C03-N2BE
Linone cocco / Cocco lawn	1402-20-0C04-N2BE
Linone corda / Cord lawn	1402-20-0C05-N2BE
Raso blue marine / Blue marine silk satin	1402-20-0C11-N2BE
Raso malva / Mauve silk satin	1402-20-0C12-N2BE
Raso fango / Fango silk satin	1402-20-0C14-N2BE
Raso madreperla / Pearl silk satin	1402-20-0C15-N2BE

Accessori Accessories	Codice Code
Lampadina / Bulb LED E27 - 2700K	RIC.000088

1402-21
Ø25 SUSPENSION

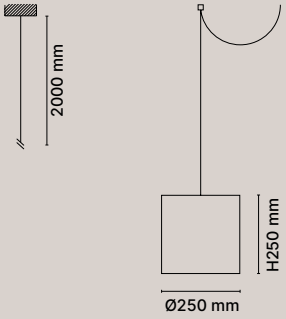

Peso / Weight: 0,9 kg

Dettagli
Details

1× 13W LED - E27
IP20

Linone e raso di seta con passamaneria a contrasto e cavo elettrico colorato /
Lawn and silk satin with clashing trimmings and colored fabric wire

P. 114

Tessuti Fabrics	Codice Code
Linone blue denim / Blue denim lawn	1402-21-0C01-N2BE
Linone melograno / Pomegranate lawn	1402-21-0C02-N2BE
Linone verde lime / Lime green lawn	1402-21-0C03-N2BE
Linone cocco / Cocco lawn	1402-21-0C04-N2BE
Linone corda / Cord lawn	1402-21-0C05-N2BE
Raso blue marine / Blue marine silk satin	1402-21-0C11-N2BE
Raso malva / Mauve silk satin	1402-21-0C12-N2BE
Raso fango / Fango silk satin	1402-21-0C14-N2BE
Raso madreperla / Pearl silk satin	1402-21-0C15-N2BE

Accessori Accessories	Codice Code
Lampadina / Bulb LED E27 - 2700K	RIC.000088

1402-22
Ø35 SUSPENSION

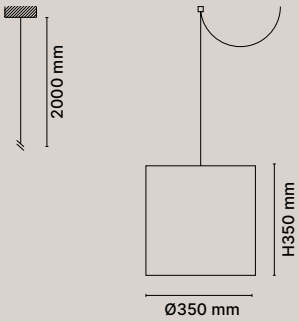

Peso / Weight: 1,2 kg

Dettagli
Details

1× 13W LED - E27
IP20

Linone e raso di seta con passamaneria a contrasto e cavo elettrico colorato /
Lawn and silk satin with clashing trimmings and colored fabric wire

P. 114

Tessuti Fabrics	Codice Code
Linone blue denim / Blue denim lawn	1402-22-0C01-N2BE
Linone melograno / Pomegranate lawn	1402-22-0C02-N2BE
Linone verde lime / Lime green lawn	1402-22-0C03-N2BE
Linone cocco / Cocco lawn	1402-22-0C04-N2BE
Linone corda / Cord lawn	1402-22-0C05-N2BE
Raso blue marine / Blue marine silk satin	1402-22-0C11-N2BE
Raso malva / Mauve silk satin	1402-22-0C12-N2BE
Raso fango / Fango silk satin	1402-22-0C14-N2BE
Raso madreperla / Pearl silk satin	1402-22-0C15-N2BE

Accessori Accessories	Codice Code
Lampadina / Bulb LED E27 - 2700K	RIC.000088

ROSONI / CANOPIES Decentramento / Decentralize

1 FITTING

Ø130 x H50 mm

Peso / Weight: 0,5 kg

Struttura metallo Metal structure	Codice Code
Bianco opaco / Matt white	AD01-T-13-01-NXBE
Titanio opaco / Matt titanium	AD18-T-13-01-NXBE

2 FITTINGS

Ø130 x H50 mm

Peso / Weight: 0,5 kg

Struttura metallo Metal structure	Codice Code
Bianco opaco / Matt white	AD01-T-13-02-NXBE
Titanio opaco / Matt titanium	AD18-T-13-02-NXBE

3 FITTINGS

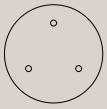

Ø130 x H50 mm

Peso / Weight: 0,5 kg

Struttura metallo Metal structure	Codice Code
Bianco opaco / Matt white	AD01-T-13-03-NXBE
Titanio opaco / Matt titanium	AD18-T-13-03-NXBE

4 FITTINGS

Ø130 x H50 mm

Peso / Weight: 0,5 kg

Struttura metallo Metal structure	Codice Code
Bianco opaco / Matt white	AD01-T-13-04-NXBE
Titanio opaco / Matt titanium	AD18-T-13-04-NXBE

8 FITTINGS

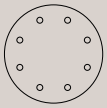

Ø130 x H50 mm

Peso / Weight: 0,5 kg

Struttura metallo Metal structure	Codice Code
Bianco opaco / Matt white	AD01-T-13-08-NXBE
Titanio opaco / Matt titanium	AD18-T-13-08-NXBE

Elementi per decentramento inclusi / Decentralize elements included

CLUB HOUSE

1402-24
TRENDY LARGE SUSPENSION

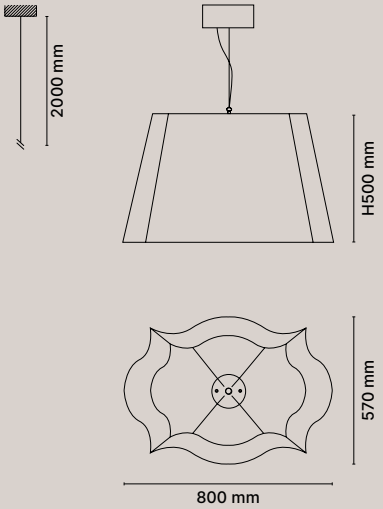

Peso / Weight: 3,0 kg

Dettagli
Details

3× 13W LED - E27
IP20

Linone e raso di seta con passamaneria a contrasto e cavo elettrico colorato /
Lawn and silk satin with clashing trimmings and colored fabric wire

P. 114

Tessuti Fabrics	Codice Code
Linone blue denim / Blue denim lawn	1402-24-0C01-N2BE
Linone melograno / Pomegranate lawn	1402-24-0C02-N2BE
Linone verde lime / Lime green lawn	1402-24-0C03-N2BE
Linone cocco / Cocco lawn	1402-24-0C04-N2BE
Linone corda / Cord lawn	1402-24-0C05-N2BE
Raso blue marine / Blue marine silk satin	1402-24-0C11-N2BE
Raso malva / Mauve silk satin	1402-24-0C12-N2BE
Raso fango / Fango silk satin	1402-24-0C14-N2BE
Raso madreperla / Pearl silk satin	1402-24-0C15-N2BE

Accessori Accessories	Codice Code
Chiusura inferiore parziale in tessuto (PVC bianco) / Partial fabric bottom closure (white PVC)	1402-90-0B21
Lampadina / Bulb LED E27 - 2700K	RIC.000088

1402-23
TRENDY SMALL SUSPENSION

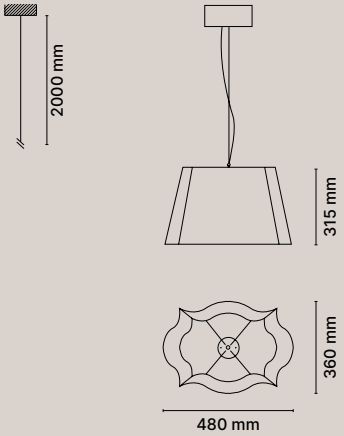

Peso / Weight: 2,0 kg

Dettagli
Details

1× 13W LED - E27
IP20

Linone e raso di seta con passamaneria a contrasto e cavo elettrico colorato /
Lawn and silk satin with clashing trimmings and colored fabric wire

P. 114

Tessuti Fabrics	Codice Code
Linone blue denim / Blue denim lawn	1402-23-0C01-N2BE
Linone melograno / Pomegranate lawn	1402-23-0C02-N2BE
Linone verde lime / Lime green lawn	1402-23-0C03-N2BE
Linone cocco / Cocco lawn	1402-23-0C04-N2BE
Linone corda / Cord lawn	1402-23-0C05-N2BE
Raso blue marine / Blue marine silk satin	1402-23-0C11-N2BE
Raso malva / Mauve silk satin	1402-23-0C12-N2BE
Raso fango / Fango silk satin	1402-23-0C14-N2BE
Raso madreperla / Pearl silk satin	1402-23-0C15-N2BE

Accessori Accessories	Codice Code
Chiusura inferiore parziale in tessuto (PVC bianco) / Partial fabric bottom closure (white PVC)	1402-91-0B21
Lampadina / Bulb LED E27 - 2700K	RIC.000088

CLUB HOUSE

1402-30
31X14 WALL

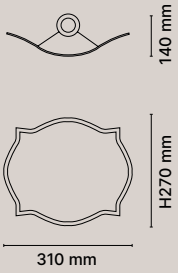

Peso / Weight: 0,4 kg

Dettagli
Details

1× 13W LED - E27
IP20

Tessuti Cat. A /
Fabrics Cat. A
Tessuti Cat. B /
Fabrics Cat. B
Tessuti Cat. Extra, Club House /
Fabrics Cat. Extra, Club House

P. 114

	Tessuti Fabrics	Codice Code
	Cotone bianco / White cotton	1402-30-0B01-NXBE
	Cotone beige / Beige cotton	1402-30-0B02-NXBE
	Cotone marrone / Brown cotton	1402-30-0B03-NXBE
	Cotone amaranto / Reddish purple cotton	1402-30-0B04-NXBE
	Cotone verde bottiglia / Bottle green cotton	1402-30-0B05-NXBE
	Pergamena bianco / White parchment	1402-30-0B11-NXBE
	Seta bianco / White silk	1402-30-0A01-NXBE
	Seta nero / Black silk	1402-30-0A02-NXBE
	Seta avorio / Ivory silk	1402-30-0A03-NXBE
	Seta ambra / Amber silk	1402-30-0A04-NXBE
	Seta tabacco / Tobacco silk	1402-30-0A05-NXBE
	Seta rosso / Red silk	1402-30-0A06-NXBE
	Seta perla / Pearl silk	1402-30-0A07-NXBE
	Lino bianco / White linen	1402-30-0A11-NXBE
	Lino nero / Black linen	1402-30-0A12-NXBE
	Lino sabbia / Sand linen	1402-30-0A13-NXBE
	Lino tortora / Tortora linen	1402-30-0A14-NXBE
	Lino melone / Melon linen	1402-30-0A15-NXBE
	Lino grezzo / Unbleached linen	1402-30-0A16-NXBE
	Linone corda / Corda lawn	1402-30-0A21-NXBE
	Linone cocco / Cocco lawn	1402-30-0A22-NXBE
	Linone melograno / Pomegranate lawn	1402-30-0A23-NXBE
	Linone verde lime / Lime green lawn	1402-30-0A24-NXBE
	Linone blue denim / Blue denim lawn	1402-30-0A25-NXBE
	Linone tabacco / Tobacco lawn	1402-30-0A26-NXBE
	Net avorio / Ivory net	1402-30-0A51-NXBE
	Raso madreperla / Pearl silk satin	1402-30-0E01-NXBE
	Raso fango / Fango silk satin	1402-30-0E02-NXBE
	Raso malva / Mauve silk satin	1402-30-0E03-NXBE
	Raso blue marine / Blue marine silk satin	1402-30-0E06-NXBE
passamaneria / trimm	Linone blue denim / Blue denim lawn	1402-30-0C01-NXBE
passamaneria / trimm	Linone melograno / Pomegranate lawn	1402-30-0C02-NXBE
passamaneria / trimm	Linone verde lime / Lime green lawn	1402-30-0C03-NXBE
passamaneria / trimm	Linone cocco / Cocco lawn	1402-30-0C04-NXBE
passamaneria / trimm	Linone corda / Cord lawn	1402-30-0C05-NXBE
passamaneria / trimm	Raso blue marine / Blue marine silk satin	1402-30-0C11-NXBE
passamaneria / trimm	Raso malva / Mauve silk satin	1402-30-0C12-NXBE
passamaneria / trimm	Raso fango / Fango silk satin	1402-30-0C14-NXBE
passamaneria / trimm	Raso madreperla / Pearl silk satin	1402-30-0C15-NXBE

Accessori Accessories	Codice Code
Lampadina / Bulb LED E27 - 2700K	RIC.000088

CLUB HOUSE

1402-31
34X16 WALL

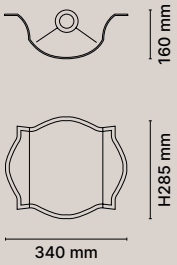

Peso / Weight: 0,4 kg

Dettagli
Details

1× 13W LED - E27
IP20

Tessuti Cat. A /
Fabrics Cat. A
Tessuti Cat. B /
Fabrics Cat. B
Tessuti Cat. Extra, Club House /
Fabrics Cat. Extra, Club House

P. 114

	Tessuti Fabrics	Codice Code
	Cotone bianco / White cotton	1402-31-0B01-NXBE
	Cotone beige / Beige cotton	1402-31-0B02-NXBE
	Cotone marrone / Brown cotton	1402-31-0B03-NXBE
	Cotone amaranto / Reddish purple cotton	1402-31-0B04-NXBE
	Cotone verde bottiglia / Bottle green cotton	1402-31-0B05-NXBE
	Pergamena bianco / White parchment	1402-31-0B11-NXBE
	Seta bianco / White silk	1402-31-0A01-NXBE
	Seta nero / Black silk	1402-31-0A02-NXBE
	Seta avorio / Ivory silk	1402-31-0A03-NXBE
	Seta ambra / Amber silk	1402-31-0A04-NXBE
	Seta tabacco / Tobacco silk	1402-31-0A05-NXBE
	Seta rosso / Red silk	1402-31-0A06-NXBE
	Seta perla / Pearl silk	1402-31-0A07-NXBE
	Lino bianco / White linen	1402-31-0A11-NXBE
	Lino nero / Black linen	1402-31-0A12-NXBE
	Lino sabbia / Sand linen	1402-31-0A13-NXBE
	Lino tortora / Tortora linen	1402-31-0A14-NXBE
	Lino melone / Melon linen	1402-31-0A15-NXBE
	Lino grezzo / Unbleached linen	1402-31-0A16-NXBE
	Linone corda / Corda lawn	1402-31-0A21-NXBE
	Linone cocco / Cocco lawn	1402-31-0A22-NXBE
	Linone melograno / Pomegranate lawn	1402-31-0A23-NXBE
	Linone verde lime / Lime green lawn	1402-31-0A24-NXBE
	Linone blue denim / Blue denim lawn	1402-31-0A25-NXBE
	Linone tabacco / Tobacco lawn	1402-31-0A26-NXBE
	Net avorio / Ivory net	1402-31-0A51-NXBE
	Raso madreperla / Pearl silk satin	1402-31-0E01-NXBE
	Raso fango / Fango silk satin	1402-31-0E02-NXBE
	Raso malva / Mauve silk satin	1402-31-0E03-NXBE
	Raso blue marine / Blue marine silk satin	1402-31-0E06-NXBE
passamaneria / trimm	Linone blue denim / Blue denim lawn	1402-31-0C01-NXBE
passamaneria / trimm	Linone melograno / Pomegranate lawn	1402-31-0C02-NXBE
passamaneria / trimm	Linone verde lime / Lime green lawn	1402-31-0C03-NXBE
passamaneria / trimm	Linone cocco / Cocco lawn	1402-31-0C04-NXBE
passamaneria / trimm	Linone corda / Cord lawn	1402-31-0C05-NXBE
passamaneria / trimm	Raso blue marine / Blue marine silk satin	1402-31-0C11-NXBE
passamaneria / trimm	Raso malva / Mauve silk satin	1402-31-0C12-NXBE
passamaneria / trimm	Raso fango / Fango silk satin	1402-31-0C14-NXBE
passamaneria / trimm	Raso madreperla / Pearl silk satin	1402-31-0C15-NXBE

Accessori Accessories	Codice Code
Lampadina / Bulb LED E27 - 2700K	RIC.000088

CLUB HOUSE

1402-32
33X17 LAMP

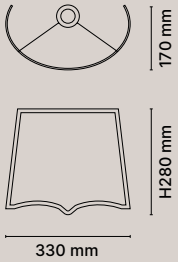

Peso / Weight: 0,5 kg

Dettagli
Details

1× 13W LED - E27
IP20

Tessuti Cat. A /
Fabrics Cat. A
Tessuti Cat. B /
Fabrics Cat. B
Tessuti Cat. Extra, Club House /
Fabrics Cat. Extra, Club House

P. 114

	Tessuti Fabrics	Codice Code
	Cotone bianco / White cotton	1402-32-0B01-NXBE
	Cotone beige / Beige cotton	1402-32-0B02-NXBE
	Cotone marrone / Brown cotton	1402-32-0B03-NXBE
	Cotone amaranto / Reddish purple cotton	1402-32-0B04-NXBE
	Cotone verde bottiglia / Bottle green cotton	1402-32-0B05-NXBE
	Pergamena bianco / White parchment	1402-32-0B11-NXBE
	Seta bianco / White silk	1402-32-0A01-NXBE
	Seta nero / Black silk	1402-32-0A02-NXBE
	Seta avorio / Ivory silk	1402-32-0A03-NXBE
	Seta ambra / Amber silk	1402-32-0A04-NXBE
	Seta tabacco / Tobacco silk	1402-32-0A05-NXBE
	Seta rosso / Red silk	1402-32-0A06-NXBE
	Seta perla / Pearl silk	1402-32-0A07-NXBE
	Lino bianco / White linen	1402-32-0A11-NXBE
	Lino nero / Black linen	1402-32-0A12-NXBE
	Lino sabbia / Sand linen	1402-32-0A13-NXBE
	Lino tortora / Tortora linen	1402-32-0A14-NXBE
	Lino melone / Melon linen	1402-32-0A15-NXBE
	Lino grezzo / Unbleached linen	1402-32-0A16-NXBE
	Linone corda / Corda lawn	1402-32-0A21-NXBE
	Linone cocco / Cocco lawn	1402-32-0A22-NXBE
	Linone melograno / Pomegranate lawn	1402-32-0A23-NXBE
	Linone verde lime / Lime green lawn	1402-32-0A24-NXBE
	Linone blue denim / Blue denim lawn	1402-32-0A25-NXBE
	Linone tabacco / Tobacco lawn	1402-32-0A26-NXBE
	Net avorio / Ivory net	1402-32-0A51-NXBE
	Raso madreperla / Pearl silk satin	1402-32-0E01-NXBE
	Raso fango / Fango silk satin	1402-32-0E02-NXBE
	Raso malva / Mauve silk satin	1402-32-0E03-NXBE
	Raso blue marine / Blue marine silk satin	1402-32-0E06-NXBE
passamaneria / trimm	Linone blue denim / Blue denim lawn	1402-32-0C01-NXBE
passamaneria / trimm	Linone melograno / Pomegranate lawn	1402-32-0C02-NXBE
passamaneria / trimm	Linone verde lime / Lime green lawn	1402-32-0C03-NXBE
passamaneria / trimm	Linone cocco / Cocco lawn	1402-32-0C04-NXBE
passamaneria / trimm	Linone corda / Cord lawn	1402-32-0C05-NXBE
passamaneria / trimm	Raso blue marine / Blue marine silk satin	1402-32-0C11-NXBE
passamaneria / trimm	Raso malva / Mauve silk satin	1402-32-0C12-NXBE
passamaneria / trimm	Raso fango / Fango silk satin	1402-32-0C14-NXBE
passamaneria / trimm	Raso madreperla / Pearl silk satin	1402-32-0C15-NXBE

Accessori Accessories	Codice Code
Lampadina / Bulb LED E27 - 2700K	RIC.000088

CLUB HOUSE

1402-33
35X23 WALL

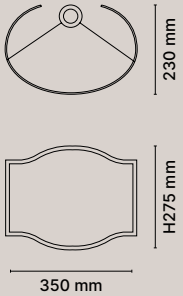

Peso / Weight: 0,5 kg

Dettagli
Details

1× 13W LED - E27
IP20

Tessuti Cat. A /
Fabrics Cat. A
Tessuti Cat. B /
Fabrics Cat. B
Tessuti Cat. Extra, Club House /
Fabrics Cat. Extra, Club House

P. 114

	Tessuti Fabrics	Codice Code
	Cotone bianco / White cotton	1402-33-0B01-NXBE
	Cotone beige / Beige cotton	1402-33-0B02-NXBE
	Cotone marrone / Brown cotton	1402-33-0B03-NXBE
	Cotone amaranto / Reddish purple cotton	1402-33-0B04-NXBE
	Cotone verde bottiglia / Bottle green cotton	1402-33-0B05-NXBE
	Pergamena bianco / White parchment	1402-33-0B11-NXBE
	Seta bianco / White silk	1402-33-0A01-NXBE
	Seta nero / Black silk	1402-33-0A02-NXBE
	Seta avorio / Ivory silk	1402-33-0A03-NXBE
	Seta ambra / Amber silk	1402-33-0A04-NXBE
	Seta tabacco / Tobacco silk	1402-33-0A05-NXBE
	Seta rosso / Red silk	1402-33-0A06-NXBE
	Seta perla / Pearl silk	1402-33-0A07-NXBE
	Lino bianco / White linen	1402-33-0A11-NXBE
	Lino nero / Black linen	1402-33-0A12-NXBE
	Lino sabbia / Sand linen	1402-33-0A13-NXBE
	Lino tortora / Tortora linen	1402-33-0A14-NXBE
	Lino melone / Melon linen	1402-33-0A15-NXBE
	Lino grezzo / Unbleached linen	1402-33-0A16-NXBE
	Linone corda / Corda lawn	1402-33-0A21-NXBE
	Linone cocco / Cocco lawn	1402-33-0A22-NXBE
	Linone melograno / Pomegranate lawn	1402-33-0A23-NXBE
	Linone verde lime / Lime green lawn	1402-33-0A24-NXBE
	Linone blue denim / Blue denim lawn	1402-33-0A25-NXBE
	Linone tabacco / Tobacco lawn	1402-33-0A26-NXBE
	Net avorio / Ivory net	1402-33-0A51-NXBE
	Raso madreperla / Pearl silk satin	1402-33-0E01-NXBE
	Raso fango / Fango silk satin	1402-33-0E02-NXBE
	Raso malva / Mauve silk satin	1402-33-0E03-NXBE
	Raso blue marine / Blue marine silk satin	1402-33-0E06-NXBE
passamaneria / trimm	Linone blue denim / Blue denim lawn	1402-33-0C01-NXBE
passamaneria / trimm	Linone melograno / Pomegranate lawn	1402-33-0C02-NXBE
passamaneria / trimm	Linone verde lime / Lime green lawn	1402-33-0C03-NXBE
passamaneria / trimm	Linone cocco / Cocco lawn	1402-33-0C04-NXBE
passamaneria / trimm	Linone corda / Cord lawn	1402-33-0C05-NXBE
passamaneria / trimm	Raso blue marine / Blue marine silk satin	1402-33-0C11-NXBE
passamaneria / trimm	Raso malva / Mauve silk satin	1402-33-0C12-NXBE
passamaneria / trimm	Raso fango / Fango silk satin	1402-33-0C14-NXBE
passamaneria / trimm	Raso madreperla / Pearl silk satin	1402-33-0C15-NXBE

Accessori Accessories	Codice Code
Lampadina / Bulb LED E27 - 2700K	RIC.000088

CLUB HOUSE

1402-34
52X18 WALL

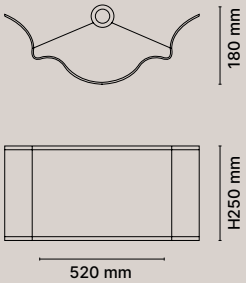

Peso / Weight: 0,7 kg

Dettagli
Details

1× 13W LED - E27
IP20

Tessuti Cat. A /
Fabrics Cat. A
Tessuti Cat. B /
Fabrics Cat. B
Tessuti Cat. Extra, Club House /
Fabrics Cat. Extra, Club House

P. 114

	Tessuti Fabrics	Codice Code
	Cotone bianco / White cotton	1402-34-0B01-NXBE
	Cotone beige / Beige cotton	1402-34-0B02-NXBE
	Cotone marrone / Brown cotton	1402-34-0B03-NXBE
	Cotone amaranto / Reddish purple cotton	1402-34-0B04-NXBE
	Cotone verde bottiglia / Bottle green cotton	1402-34-0B05-NXBE
	Pergamena bianco / White parchment	1402-34-0B11-NXBE
	Seta bianco / White silk	1402-34-0A01-NXBE
	Seta nero / Black silk	1402-34-0A02-NXBE
	Seta avorio / Ivory silk	1402-34-0A03-NXBE
	Seta ambra / Amber silk	1402-34-0A04-NXBE
	Seta tabacco / Tobacco silk	1402-34-0A05-NXBE
	Seta rosso / Red silk	1402-34-0A06-NXBE
	Seta perla / Pearl silk	1402-34-0A07-NXBE
	Lino bianco / White linen	1402-34-0A11-NXBE
	Lino nero / Black linen	1402-34-0A12-NXBE
	Lino sabbia / Sand linen	1402-34-0A13-NXBE
	Lino tortora / Tortora linen	1402-34-0A14-NXBE
	Lino melone / Melon linen	1402-34-0A15-NXBE
	Lino grezzo / Unbleached linen	1402-34-0A16-NXBE
	Linone corda / Corda lawn	1402-34-0A21-NXBE
	Linone cocco / Cocco lawn	1402-34-0A22-NXBE
	Linone melograno / Pomegranate lawn	1402-34-0A23-NXBE
	Linone verde lime / Lime green lawn	1402-34-0A24-NXBE
	Linone blue denim / Blue denim lawn	1402-34-0A25-NXBE
	Linone tabacco / Tobacco lawn	1402-34-0A26-NXBE
	Net avorio / Ivory net	1402-34-0A51-NXBE
	Raso madreperla / Pearl silk satin	1402-34-0E01-NXBE
	Raso fango / Fango silk satin	1402-34-0E02-NXBE
	Raso malva / Mauve silk satin	1402-34-0E03-NXBE
	Raso blue marine / Blue marine silk satin	1402-34-0E06-NXBE
passamaneria / trimm	Linone blue denim / Blue denim lawn	1402-34-0C01-NXBE
passamaneria / trimm	Linone melograno / Pomegranate lawn	1402-34-0C02-NXBE
passamaneria / trimm	Linone verde lime / Lime green lawn	1402-34-0C03-NXBE
passamaneria / trimm	Linone cocco / Cocco lawn	1402-34-0C04-NXBE
passamaneria / trimm	Linone corda / Cord lawn	1402-34-0C05-NXBE
passamaneria / trimm	Raso blue marine / Blue marine silk satin	1402-34-0C11-NXBE
passamaneria / trimm	Raso malva / Mauve silk satin	1402-34-0C12-NXBE
passamaneria / trimm	Raso fango / Fango silk satin	1402-34-0C14-NXBE
passamaneria / trimm	Raso madreperla / Pearl silk satin	1402-34-0C15-NXBE

Accessori Accessories	Codice Code
Lampadina / Bulb LED E27 - 2700K	RIC.000088

LUXURY

0607-20
SEMICONE Ø60 SUSPENSION

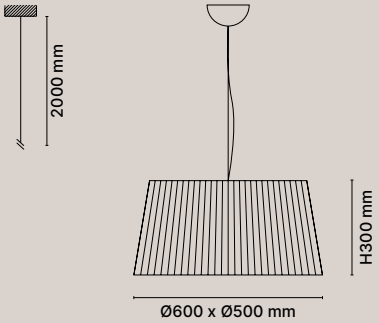

Peso / Weight: 3,0 kg

Dettagli
Details

3× 13W LED - E27
IP20

Tessuti Cat. A /
Fabrics Cat. A
Tessuti Cat. B /
Fabrics Cat. B
Tessuti Cat. Extra, Plissè seta a mano /
Fabrics Cat. Extra, Hand made silk plissè

Chiusura inferiore parziale in plexiglass /
Partial plexiglass bottom closure

P. 114

Tessuti Fabrics	Codice Code
Cotone bianco / White cotton	0607-20-0B01-N2BE
Cotone beige / Beige cotton	0607-20-0B02-N2BE
Cotone marrone / Brown cotton	0607-20-0B03-N2BE
Cotone amaranto / Reddish purple cotton	0607-20-0B04-N2BE
Cotone verde bottiglia / Bottle green cotton	0607-20-0B05-N2BE
Pergamena bianco / White parchment	0607-20-0B11-N2BE
Seta bianco / White silk	0607-20-0A01-N2BE
Seta nero / Black silk	0607-20-0A02-N2BE
Seta avorio / Ivory silk	0607-20-0A03-N2BE
Seta ambra / Amber silk	0607-20-0A04-N2BE
Seta tabacco / Tobacco silk	0607-20-0A05-N2BE
Seta rosso / Red silk	0607-20-0A06-N2BE
Seta perla / Pearl silk	0607-20-0A07-N2BE
Lino bianco / White linen	0607-20-0A11-N2BE
Lino nero / Black linen	0607-20-0A12-N2BE
Lino sabbia / Sand linen	0607-20-0A13-N2BE
Lino tortora / Tortora linen	0607-20-0A14-N2BE
Lino melone / Melon linen	0607-20-0A15-N2BE
Lino grezzo / Unbleached linen	0607-20-0A16-N2BE
Linone corda / Corda lawn	0607-20-0A21-N2BE
Linone cocco / Cocco lawn	0607-20-0A22-N2BE
Linone melograno / Pomegranate lawn	0607-20-0A23-N2BE
Linone verde lime / Lime green lawn	0607-20-0A24-N2BE
Linone blue denim / Blue denim lawn	0607-20-0A25-N2BE
Linone tabacco / Tobacco lawn	0607-20-0A26-N2BE
Net avorio / Ivory net	0607-20-0A51-N2BE
Raso madreperla / Pearl silk satin	0607-20-0E01-N2BE
Raso fango/ Fango silk satin	0607-20-0E02-N2BE
Raso malva / Mauve silk satin	0607-20-0E03-N2BE
Raso blue marine / Blue marine silk satin	0607-20-0E06-N2BE
Plissè seta bianco / White silk plissè	0607-20-0E11-N2BE
Plissè seta avorio / Ivory silk plissè	0607-20-0E12-N2BE
Plissè seta grigio / Grey silk plissè	0607-20-0E13-N2BE
Plissè seta fumo di Londra / London smoke silk plissè	0607-20-0E14-N2BE
Plissè seta tabacco / Tobacco silk plissè	0607-20-0E15-N2BE

Accessori Accessories	Codice Code
Lampadina / Bulb LED E27 - 2700K	RIC.000088

0607-21
SEMICONE Ø80 SUSPENSION

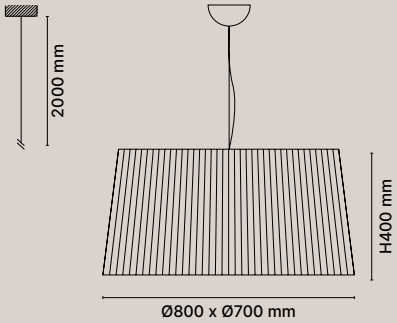

Peso / Weight: 4,0 kg

Dettagli
Details

3× 13W LED - E27
IP20

Tessuti Cat. A /
Fabrics Cat. A
Tessuti Cat. B /
Fabrics Cat. B
Tessuti Cat. Extra, Plissè seta a mano /
Fabrics Cat. Extra, Hand made silk plissè

Chiusura inferiore parziale in plexiglass /
Partial plexiglass bottom closure

P. 114

Tessuti Fabrics	Codice Code
Cotone bianco / White cotton	0607-21-0B01-N2BE
Cotone beige / Beige cotton	0607-21-0B02-N2BE
Cotone marrone / Brown cotton	0607-21-0B03-N2BE
Cotone amaranto / Reddish purple cotton	0607-21-0B04-N2BE
Cotone verde bottiglia / Bottle green cotton	0607-21-0B05-N2BE
Pergamena bianco / White parchment	0607-21-0B11-N2BE
Seta bianco / White silk	0607-21-0A01-N2BE
Seta nero / Black silk	0607-21-0A02-N2BE
Seta avorio / Ivory silk	0607-21-0A03-N2BE
Seta ambra / Amber silk	0607-21-0A04-N2BE
Seta tabacco / Tobacco silk	0607-21-0A05-N2BE
Seta rosso / Red silk	0607-21-0A06-N2BE
Seta perla / Pearl silk	0607-21-0A07-N2BE
Lino bianco / White linen	0607-21-0A11-N2BE
Lino nero / Black linen	0607-21-0A12-N2BE
Lino sabbia / Sand linen	0607-21-0A13-N2BE
Lino tortora / Tortora linen	0607-21-0A14-N2BE
Lino melone / Melon linen	0607-21-0A15-N2BE
Lino grezzo / Unbleached linen	0607-21-0A16-N2BE
Linone corda / Corda lawn	0607-21-0A21-N2BE
Linone cocco / Cocco lawn	0607-21-0A22-N2BE
Linone melograno / Pomegranate lawn	0607-21-0A23-N2BE
Linone verde lime / Lime green lawn	0607-21-0A24-N2BE
Linone blue denim / Blue denim lawn	0607-21-0A25-N2BE
Linone tabacco / Tobacco lawn	0607-21-0A26-N2BE
Net avorio / Ivory net	0607-21-0A51-N2BE
Raso madreperla / Pearl silk satin	0607-21-0E01-N2BE
Raso fango/ Fango silk satin	0607-21-0E02-N2BE
Raso malva / Mauve silk satin	0607-21-0E03-N2BE
Raso blue marine / Blue marine silk satin	0607-21-0E06-N2BE
Plissè seta bianco / White silk plissè	0607-21-0E11-N2BE
Plissè seta avorio / Ivory silk plissè	0607-21-0E12-N2BE
Plissè seta grigio / Grey silk plissè	0607-21-0E13-N2BE
Plissè seta fumo di Londra / London smoke silk plissè	0607-21-0E14-N2BE
Plissè seta tabacco / Tobacco silk plissè	0607-21-0E15-N2BE

Accessori Accessories	Codice Code
Lampadina / Bulb LED E27 - 2700K	RIC.000088

LUXURY

0607-22
SEMICONE Ø100 SUSPENSION

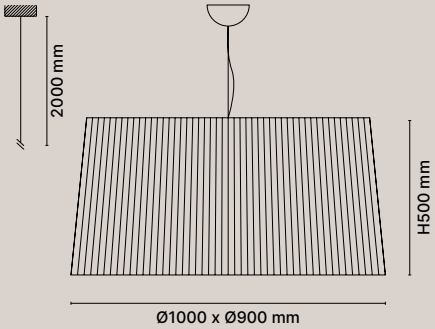

Peso / Weight: 5,0 kg

Dettagli
Details

3× 13W LED - E27
IP20

Tessuti Cat. A /
Fabrics Cat. A
Tessuti Cat. B /
Fabrics Cat. B
Tessuti Cat. Extra, Plissè seta a mano /
Fabrics Cat. Extra, Hand made silk plissè

Chiusura inferiore parziale in plexiglass /
Partial plexiglass bottom closure

P. 114

Tessuti Fabrics	Codice Code
Cotone bianco / White cotton	0607-22-0B01-N2BE
Cotone beige / Beige cotton	0607-22-0B02-N2BE
Cotone marrone / Brown cotton	0607-22-0B03-N2BE
Cotone amaranto / Reddish purple cotton	0607-22-0B04-N2BE
Cotone verde bottiglia / Bottle green cotton	0607-22-0B05-N2BE
Pergamena bianco / White parchment	0607-22-0B11-N2BE
Seta bianco / White silk	0607-22-0A01-N2BE
Seta nero / Black silk	0607-22-0A02-N2BE
Seta avorio / Ivory silk	0607-22-0A03-N2BE
Seta ambra / Amber silk	0607-22-0A04-N2BE
Seta tabacco / Tobacco silk	0607-22-0A05-N2BE
Seta rosso / Red silk	0607-22-0A06-N2BE
Seta perla / Pearl silk	0607-22-0A07-N2BE
Lino bianco / White linen	0607-22-0A11-N2BE
Lino nero / Black linen	0607-22-0A12-N2BE
Lino sabbia / Sand linen	0607-22-0A13-N2BE
Lino tortora / Tortora linen	0607-22-0A14-N2BE
Lino melone / Melon linen	0607-22-0A15-N2BE
Lino grezzo / Unbleached linen	0607-22-0A16-N2BE
Linone corda / Corda lawn	0607-22-0A21-N2BE
Linone cocco / Cocco lawn	0607-22-0A22-N2BE
Linone melograno / Pomegranate lawn	0607-22-0A23-N2BE
Linone verde lime / Lime green lawn	0607-22-0A24-N2BE
Linone blue denim / Blue denim lawn	0607-22-0A25-N2BE
Linone tabacco / Tobacco lawn	0607-22-0A26-N2BE
Net avorio / Ivory net	0607-22-0A51-N2BE
Raso madreperla / Pearl silk satin	0607-22-0E01-N2BE
Raso fango/ Fango silk satin	0607-22-0E02-N2BE
Raso malva / Mauve silk satin	0607-22-0E03-N2BE
Raso blue marine / Blue marine silk satin	0607-22-0E06-N2BE
Plissè seta bianco / White silk plissè	0607-22-0E11-N2BE
Plissè seta avorio / Ivory silk plissè	0607-22-0E12-N2BE
Plissè seta grigio / Grey silk plissè	0607-22-0E13-N2BE
Plissè seta fumo di Londra / London smoke silk plissè	0607-22-0E14-N2BE
Plissè seta tabacco / Tobacco silk plissè	0607-22-0E15-N2BE

Accessori Accessories	Codice Code
Lampadina / Bulb LED E27 - 2700K	RIC.000088

LUXURY

0607-23
CYLINDER Ø60 SUSPENSION

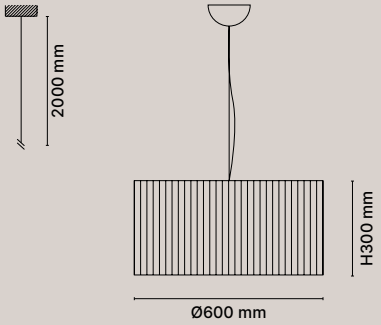

Peso / Weight: 3,0 kg

Dettagli
Details

3× 13W LED - E27
IP20

Tessuti Cat. A /
Fabrics Cat. A
Tessuti Cat. B /
Fabrics Cat. B
Tessuti Cat. Extra, Plissè seta a mano /
Fabrics Cat. Extra, Hand made silk plissè

Chiusura inferiore parziale in plexiglass /
Partial plexiglass bottom closure

P. 114

Tessuti Fabrics	Codice Code
Cotone bianco / White cotton	0607-23-0B01-N2BE
Cotone beige / Beige cotton	0607-23-0B02-N2BE
Cotone marrone / Brown cotton	0607-23-0B03-N2BE
Cotone amaranto / Reddish purple cotton	0607-23-0B04-N2BE
Cotone verde bottiglia / Bottle green cotton	0607-23-0B05-N2BE
Pergamena bianco / White parchment	0607-23-0B11-N2BE
Seta bianco / White silk	0607-23-0A01-N2BE
Seta nero / Black silk	0607-23-0A02-N2BE
Seta avorio / Ivory silk	0607-23-0A03-N2BE
Seta ambra / Amber silk	0607-23-0A04-N2BE
Seta tabacco / Tobacco silk	0607-23-0A05-N2BE
Seta rosso / Red silk	0607-23-0A06-N2BE
Seta perla / Pearl silk	0607-23-0A07-N2BE
Lino bianco / White linen	0607-23-0A11-N2BE
Lino nero / Black linen	0607-23-0A12-N2BE
Lino sabbia / Sand linen	0607-23-0A13-N2BE
Lino tortora / Tortora linen	0607-23-0A14-N2BE
Lino melone / Melon linen	0607-23-0A15-N2BE
Lino grezzo / Unbleached linen	0607-23-0A16-N2BE
Linone corda / Corda lawn	0607-23-0A21-N2BE
Linone cocco / Cocco lawn	0607-23-0A22-N2BE
Linone melograno / Pomegranate lawn	0607-23-0A23-N2BE
Linone verde lime / Lime green lawn	0607-23-0A24-N2BE
Linone blue denim / Blue denim lawn	0607-23-0A25-N2BE
Linone tabacco / Tobacco lawn	0607-23-0A26-N2BE
Net avorio / Ivory net	0607-23-0A51-N2BE
Raso madreperla / Pearl silk satin	0607-23-0E01-N2BE
Raso fango/ Fango silk satin	0607-23-0E02-N2BE
Raso malva / Mauve silk satin	0607-23-0E03-N2BE
Raso blue marine / Blue marine silk satin	0607-23-0E06-N2BE
Plissè seta bianco / White silk plissè	0607-23-0E11-N2BE
Plissè seta avorio / Ivory silk plissè	0607-23-0E12-N2BE
Plissè seta grigio / Grey silk plissè	0607-23-0E13-N2BE
Plissè seta fumo di Londra / London smoke silk plissè	0607-23-0E14-N2BE
Plissè seta tabacco / Tobacco silk plissè	0607-23-0E15-N2BE

Accessori Accessories	Codice Code
Lampadina / Bulb LED E27 - 2700K	RIC.000088

LUXURY

0607-24
CYLINDER Ø80 SUSPENSION

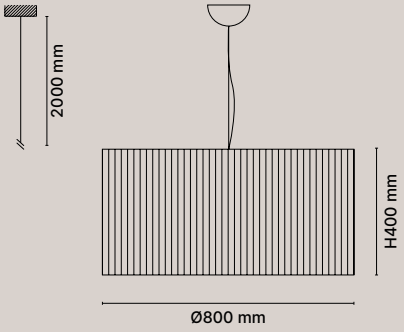

Peso / Weight: 4,0 kg

Dettagli
Details

3× 13W LED - E27
IP20

Tessuti Cat. A /
Fabrics Cat. A
Tessuti Cat. B /
Fabrics Cat. B
Tessuti Cat. Extra, Plissè seta a mano /
Fabrics Cat. Extra, Hand made silk plissè

Chiusura inferiore parziale in plexiglass /
Partial plexiglass bottom closure

P. 114

Tessuti Fabrics	Codice Code
Cotone bianco / White cotton	0607-24-0B01-N2BE
Cotone beige / Beige cotton	0607-24-0B02-N2BE
Cotone marrone / Brown cotton	0607-24-0B03-N2BE
Cotone amaranto / Reddish purple cotton	0607-24-0B04-N2BE
Cotone verde bottiglia / Bottle green cotton	0607-24-0B05-N2BE
Pergamena bianco / White parchment	0607-24-0B11-N2BE
Seta bianco / White silk	0607-24-0A01-N2BE
Seta nero / Black silk	0607-24-0A02-N2BE
Seta avorio / Ivory silk	0607-24-0A03-N2BE
Seta ambra / Amber silk	0607-24-0A04-N2BE
Seta tabacco / Tobacco silk	0607-24-0A05-N2BE
Seta rosso / Red silk	0607-24-0A06-N2BE
Seta perla / Pearl silk	0607-24-0A07-N2BE
Lino bianco / White linen	0607-24-0A11-N2BE
Lino nero / Black linen	0607-24-0A12-N2BE
Lino sabbia / Sand linen	0607-24-0A13-N2BE
Lino tortora / Tortora linen	0607-24-0A14-N2BE
Lino melone / Melon linen	0607-24-0A15-N2BE
Lino grezzo / Unbleached linen	0607-24-0A16-N2BE
Linone corda / Corda lawn	0607-24-0A21-N2BE
Linone cocco / Cocco lawn	0607-24-0A22-N2BE
Linone melograno / Pomegranate lawn	0607-24-0A23-N2BE
Linone verde lime / Lime green lawn	0607-24-0A24-N2BE
Linone blue denim / Blue denim lawn	0607-24-0A25-N2BE
Linone tabacco / Tobacco lawn	0607-24-0A26-N2BE
Net avorio / Ivory net	0607-24-0A51-N2BE
Raso madreperla / Pearl silk satin	0607-24-0E01-N2BE
Raso fango/ Fango silk satin	0607-24-0E02-N2BE
Raso malva / Mauve silk satin	0607-24-0E03-N2BE
Raso blue marine / Blue marine silk satin	0607-24-0E06-N2BE
Plissè seta bianco / White silk plissè	0607-24-0E11-N2BE
Plissè seta avorio / Ivory silk plissè	0607-24-0E12-N2BE
Plissè seta grigio / Grey silk plissè	0607-24-0E13-N2BE
Plissè seta fumo di Londra / London smoke silk plissè	0607-24-0E14-N2BE
Plissè seta tabacco / Tobacco silk plissè	0607-24-0E15-N2BE

Accessori Accessories	Codice Code
Lampadina / Bulb LED E27 - 2700K	RIC.000088

LUXURY

0607-25
CYLINDER Ø100 SUSPENSION

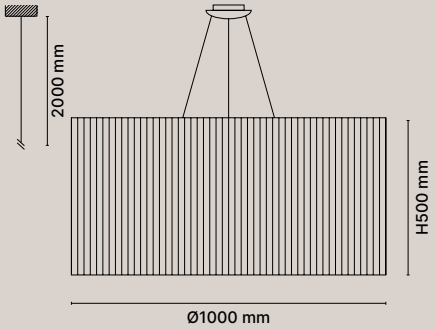

Peso / Weight: 5,0 kg

Dettagli
Details

3× 13W LED - E27
IP20

Tessuti Cat. A /
Fabrics Cat. A
Tessuti Cat. B /
Fabrics Cat. B
Tessuti Cat. Extra, Plissè seta a mano /
Fabrics Cat. Extra, Hand made silk plissè

Chiusura inferiore parziale in plexiglass /
Partial plexiglass bottom closure

P. 114

Tessuti Fabrics	Codice Code
Cotone bianco / White cotton	0607-25-0B01-N2BE
Cotone beige / Beige cotton	0607-25-0B02-N2BE
Cotone marrone / Brown cotton	0607-25-0B03-N2BE
Cotone amaranto / Reddish purple cotton	0607-25-0B04-N2BE
Cotone verde bottiglia / Bottle green cotton	0607-25-0B05-N2BE
Pergamena bianco / White parchment	0607-25-0B11-N2BE
Seta bianco / White silk	0607-25-0A01-N2BE
Seta nero / Black silk	0607-25-0A02-N2BE
Seta avorio / Ivory silk	0607-25-0A03-N2BE
Seta ambra / Amber silk	0607-25-0A04-N2BE
Seta tabacco / Tobacco silk	0607-25-0A05-N2BE
Seta rosso / Red silk	0607-25-0A06-N2BE
Seta perla / Pearl silk	0607-25-0A07-N2BE
Lino bianco / White linen	0607-25-0A11-N2BE
Lino nero / Black linen	0607-25-0A12-N2BE
Lino sabbia / Sand linen	0607-25-0A13-N2BE
Lino tortora / Tortora linen	0607-25-0A14-N2BE
Lino melone / Melon linen	0607-25-0A15-N2BE
Lino grezzo / Unbleached linen	0607-25-0A16-N2BE
Linone corda / Corda lawn	0607-25-0A21-N2BE
Linone cocco / Cocco lawn	0607-25-0A22-N2BE
Linone melograno / Pomegranate lawn	0607-25-0A23-N2BE
Linone verde lime / Lime green lawn	0607-25-0A24-N2BE
Linone blue denim / Blue denim lawn	0607-25-0A25-N2BE
Linone tabacco / Tobacco lawn	0607-25-0A26-N2BE
Net avorio / Ivory net	0607-25-0A51-N2BE
Raso madreperla / Pearl silk satin	0607-25-0E01-N2BE
Raso fango/ Fango silk satin	0607-25-0E02-N2BE
Raso malva / Mauve silk satin	0607-25-0E03-N2BE
Raso blue marine / Blue marine silk satin	0607-25-0E06-N2BE
Plissè seta bianco / White silk plissè	0607-25-0E11-N2BE
Plissè seta avorio / Ivory silk plissè	0607-25-0E12-N2BE
Plissè seta grigio / Grey silk plissè	0607-25-0E13-N2BE
Plissè seta fumo di Londra / London smoke silk plissè	0607-25-0E14-N2BE
Plissè seta tabacco / Tobacco silk plissè	0607-25-0E15-N2BE

Accessori Accessories	Codice Code
Lampadina / Bulb LED E27 - 2700K	RIC.000088

LUXURY

0607-26
RECTANGULAR 120X30 SUSPENSION

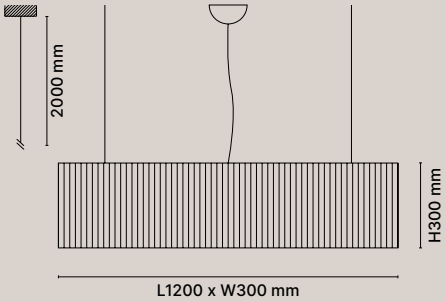

Peso / Weight: 4,5 kg

Dettagli
Details

3× 13W LED - E27
IP20

Tessuti Cat. A /
Fabrics Cat. A
Tessuti Cat. B /
Fabrics Cat. B
Tessuti Cat. Extra, Plissè seta a mano /
Fabrics Cat. Extra, Hand made silk plissè

Chiusura inferiore totale in plexiglass /
Complete plexiglass bottom closure

P. 114

Tessuti Fabrics	Codice Code
Cotone bianco / White cotton	0607-26-0B01-N2BE
Cotone beige / Beige cotton	0607-26-0B02-N2BE
Cotone marrone / Brown cotton	0607-26-0B03-N2BE
Cotone amaranto / Reddish purple cotton	0607-26-0B04-N2BE
Cotone verde bottiglia / Bottle green cotton	0607-26-0B05-N2BE
Pergamena bianco / White parchment	0607-26-0B11-N2BE
Seta bianco / White silk	0607-26-0A01-N2BE
Seta nero / Black silk	0607-26-0A02-N2BE
Seta avorio / Ivory silk	0607-26-0A03-N2BE
Seta ambra / Amber silk	0607-26-0A04-N2BE
Seta tabacco / Tobacco silk	0607-26-0A05-N2BE
Seta rosso / Red silk	0607-26-0A06-N2BE
Seta perla / Pearl silk	0607-26-0A07-N2BE
Lino bianco / White linen	0607-26-0A11-N2BE
Lino nero / Black linen	0607-26-0A12-N2BE
Lino sabbia / Sand linen	0607-26-0A13-N2BE
Lino tortora / Tortora linen	0607-26-0A14-N2BE
Lino melone / Melon linen	0607-26-0A15-N2BE
Lino grezzo / Unbleached linen	0607-26-0A16-N2BE
Linone corda / Corda lawn	0607-26-0A21-N2BE
Linone cocco / Cocco lawn	0607-26-0A22-N2BE
Linone melograno / Pomegranate lawn	0607-26-0A23-N2BE
Linone verde lime / Lime green lawn	0607-26-0A24-N2BE
Linone blue denim / Blue denim lawn	0607-26-0A25-N2BE
Linone tabacco / Tobacco lawn	0607-26-0A26-N2BE
Net avorio / Ivory net	0607-26-0A51-N2BE
Raso madreperla / Pearl silk satin	0607-26-0E01-N2BE
Raso fango/ Fango silk satin	0607-26-0E02-N2BE
Raso malva / Mauve silk satin	0607-26-0E03-N2BE
Raso blue marine / Blue marine silk satin	0607-26-0E06-N2BE
Plissè seta bianco / White silk plissè	0607-26-0E11-N2BE
Plissè seta avorio / Ivory silk plissè	0607-26-0E12-N2BE
Plissè seta grigio / Grey silk plissè	0607-26-0E13-N2BE
Plissè seta fumo di Londra / London smoke silk plissè	0607-26-0E14-N2BE
Plissè seta tabacco / Tobacco silk plissè	0607-26-0E15-N2BE

Accessori Accessories	Codice Code
Lampadina / Bulb LED E27 - 2700K	RIC.000088

NEW CLASSIC

0204-00
BON TON TABLE

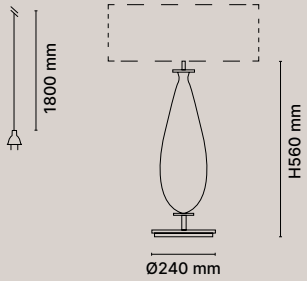

Peso / Weight: 2,5 kg

Dettagli / Details

1× 13W LED - E27
IP20

Paralumi venduti separatamente /
Shades sold separately

Struttura metallo / Metal structure	Diffusore vetro / Glass shade	Codice / Code
Antracite / Anthracite	Trasparente / Transparent	0204-00-2901-NXBE
	Fumè / Fumè	0204-00-2954-NXBE

Accessori / Accessories	Codice / Code
Lampadina / Bulb LED E27 - 2700K	RIC.000088

0205-00
DESIR TABLE

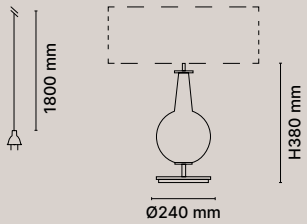

Peso / Weight: 2,5 kg

Dettagli / Details

1× 13W LED - E27
IP20

Paralumi venduti separatamente /
Shades sold separately

Struttura metallo / Metal structure	Diffusore vetro / Glass shade	Codice / Code
Antracite / Anthracite	Trasparente / Transparent	0205-00-2901-NXBE
	Fumè / Fumè	0205-00-2954-NXBE

Accessori / Accessories	Codice / Code
Lampadina / Bulb LED E27 - 2700K	RIC.000088

0206-00
PASCIÀ TABLE

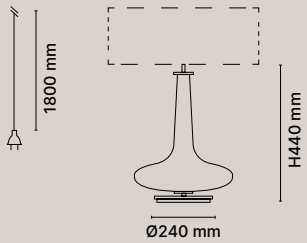

Peso / Weight: 3,7 kg

Dettagli / Details

1× 13W LED - E27
IP20

Paralumi venduti separatamente /
Shades sold separately

Struttura metallo / Metal structure	Diffusore vetro / Glass shade	Codice / Code
Antracite / Anthracite	Trasparente / Transparent	0206-00-2901-NXBE
	Fumè / Fumè	0206-00-2954-NXBE

Accessori / Accessories	Codice / Code
Lampadina / Bulb LED E27 - 2700K	RIC.000088

NEW CLASSIC

0200-90
SEMICONE TABLE SHADE

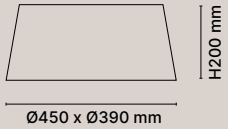

Peso / Weight: 0,5 kg

Dettagli Details	Tessuti Fabrics	Codice Code
Tessuti Cat. A / Fabrics Cat. A Tessuti Cat. B / Fabrics Cat. B Tessuti Cat. Extra / Fabrics Cat. Extra P. 114	Cotone bianco / White cotton	0200-90-0B01
	Cotone beige / Beige cotton	0200-90-0B02
	Cotone marrone / Brown cotton	0200-90-0B03
	Cotone amaranto / Reddish purple cotton	0200-90-0B04
	Cotone verde bottiglia / Bottle green cotton	0200-90-0B05
	Pergamena bianco / White parchment	0200-90-0B11
	Seta bianco / White silk	0200-90-0A01
	Seta nero / Black silk	0200-90-0A02
	Seta avorio / Ivory silk	0200-90-0A03
	Seta ambra / Amber silk	0200-90-0A04
	Seta tabacco / Tobacco silk	0200-90-0A05
	Seta rosso / Red silk	0200-90-0A06
	Seta perla / Pearl silk	0200-90-0A07
	Lino bianco / White linen	0200-90-0A11
	Lino nero / Black linen	0200-90-0A12
	Lino sabbia / Sand linen	0200-90-0A13
	Lino tortora / Tortora linen	0200-90-0A14
	Lino melone / Melon linen	0200-90-0A15
	Lino grezzo / Unbleached linen	0200-90-0A16
	Linone corda / Corda lawn	0200-90-0A21
	Linone cocco / Cocco lawn	0200-90-0A22
	Linone melograno / Pomegranate lawn	0200-90-0A23
	Linone verde lime / Lime green lawn	0200-90-0A24
	Linone blue denim / Blue denim lawn	0200-90-0A25
	Linone tabacco / Tobacco lawn	0200-90-0A26
	Net avorio / Ivory net	0200-90-0A51
	Raso madreperla / Pearl silk satin	0200-90-0E01
	Raso fango/ Fango silk satin	0200-90-0E02
	Raso malva / Mauve silk satin	0200-90-0E03
	Raso blue marine / Blue marine silk satin	0200-90-0E06

NEW CLASSIC

0200-91
MEDIUM CYLINDER TABLE SHADE

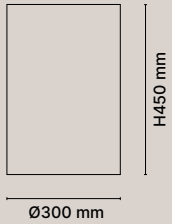

Peso / Weight: 0,5kg

Dettagli Details	Tessuti Fabrics	Codice Code
Tessuti Cat. A / Fabrics Cat. A Tessuti Cat. B / Fabrics Cat. B Tessuti Cat. Extra / Fabrics Cat. Extra P. 114	Cotone bianco / White cotton	0200-91-0B01
	Cotone beige / Beige cotton	0200-91-0B02
	Cotone marrone / Brown cotton	0200-91-0B03
	Cotone amaranto / Reddish purple cotton	0200-91-0B04
	Cotone verde bottiglia / Bottle green cotton	0200-91-0B05
	Pergamena bianco / White parchment	0200-91-0B11
	Seta bianco / White silk	0200-91-0A01
	Seta nero / Black silk	0200-91-0A02
	Seta avorio / Ivory silk	0200-91-0A03
	Seta ambra / Amber silk	0200-91-0A04
	Seta tabacco / Tobacco silk	0200-91-0A05
	Seta rosso / Red silk	0200-91-0A06
	Seta perla / Pearl silk	0200-91-0A07
	Lino bianco / White linen	0200-91-0A11
	Lino nero / Black linen	0200-91-0A12
	Lino sabbia / Sand linen	0200-91-0A13
	Lino tortora / Tortora linen	0200-91-0A14
	Lino melone / Melon linen	0200-91-0A15
	Lino grezzo / Unbleached linen	0200-91-0A16
	Linone corda / Corda lawn	0200-91-0A21
	Linone cocco / Cocco lawn	0200-91-0A22
	Linone melograno / Pomegranate lawn	0200-91-0A23
	Linone verde lime / Lime green lawn	0200-91-0A24
	Linone blue denim / Blue denim lawn	0200-91-0A25
	Linone tabacco / Tobacco lawn	0200-91-0A26
	Net avorio / Ivory net	0200-91-0A51
	Raso madreperla / Pearl silk satin	0200-91-0E01
	Raso fango/ Fango silk satin	0200-91-0E02
	Raso malva / Mauve silk satin	0200-91-0E03
	Raso blue marine / Blue marine silk satin	0200-91-0E06

NEW CLASSIC

0200-92
LOW CYLINDER TABLE SHADE

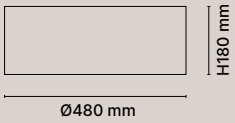

Peso / Weight: 0,5 kg

Dettagli Details	Tessuti Fabrics	Codice Code
Tessuti Cat. A / Fabrics Cat. A Tessuti Cat. B / Fabrics Cat. B Tessuti Cat. Extra / Fabrics Cat. Extra P. 114	Cotone bianco / White cotton	0200-92-0B01
	Cotone beige / Beige cotton	0200-92-0B02
	Cotone marrone / Brown cotton	0200-92-0B03
	Cotone amaranto / Reddish purple cotton	0200-92-0B04
	Cotone verde bottiglia / Bottle green cotton	0200-92-0B05
	Pergamena bianco / White parchment	0200-92-0B11
	Seta bianco / White silk	0200-92-0A01
	Seta nero / Black silk	0200-92-0A02
	Seta avorio / Ivory silk	0200-92-0A03
	Seta ambra / Amber silk	0200-92-0A04
	Seta tabacco / Tobacco silk	0200-92-0A05
	Seta rosso / Red silk	0200-92-0A06
	Seta perla / Pearl silk	0200-92-0A07
	Lino bianco / White linen	0200-92-0A11
	Lino nero / Black linen	0200-92-0A12
	Lino sabbia / Sand linen	0200-92-0A13
	Lino tortora / Tortora linen	0200-92-0A14
	Lino melone / Melon linen	0200-92-0A15
	Lino grezzo / Unbleached linen	0200-92-0A16
	Linone corda / Corda lawn	0200-92-0A21
	Linone cocco / Cocco lawn	0200-92-0A22
	Linone melograno / Pomegranate lawn	0200-92-0A23
	Linone verde lime / Lime green lawn	0200-92-0A24
	Linone blue denim / Blue denim lawn	0200-92-0A25
	Linone tabacco / Tobacco lawn	0200-92-0A26
	Net avorio / Ivory net	0200-92-0A51
	Raso madreperla / Pearl silk satin	0200-92-0E01
	Raso fango/ Fango silk satin	0200-92-0E02
	Raso malva / Mauve silk satin	0200-92-0E03
	Raso blue marine / Blue marine silk satin	0200-92-0E06

NEW CLASSIC

0204-10
BON TON FLOOR

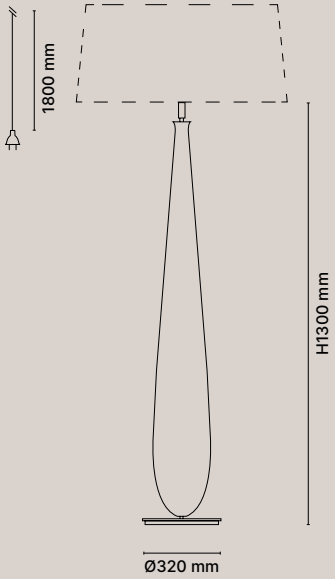

Peso / Weight: 10,0 kg

Dettagli
Details

1× 13W LED - E27
IP20
Dimmer on cable

Paralumi venduti separatamente /
Shades sold separately

Struttura metallo Metal structure	Diffusore vetro Glass shade	Codice Code
Antracite / Anthracite	Trasparente / Transparent	0204-10-2901-DXBE
	Fumè / Fumè	0204-10-2954-DXBE

Accessori Accessories	Codice Code
Lampadina / Bulb LED E27 - 2700K	RIC.000088

NEW CLASSIC

0200-93
LOW SEMICONE FLOOR SHADE

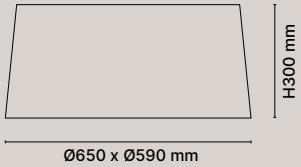

Peso / Weight: 0,7 kg

Dettagli Details	Tessuti Fabrics	Codice Code
Tessuti Cat. A / Fabrics Cat. A Tessuti Cat. B / Fabrics Cat. B Tessuti Cat. Extra / Fabrics Cat. Extra P. 114	Cotone bianco / White cotton	0200-93-0B01
	Cotone beige / Beige cotton	0200-93-0B02
	Cotone marrone / Brown cotton	0200-93-0B03
	Cotone amaranto / Reddish purple cotton	0200-93-0B04
	Cotone verde bottiglia / Bottle green cotton	0200-93-0B05
	Pergamena bianco / White parchment	0200-93-0B11
	Seta bianco / White silk	0200-93-0A01
	Seta nero / Black silk	0200-93-0A02
	Seta avorio / Ivory silk	0200-93-0A03
	Seta ambra / Amber silk	0200-93-0A04
	Seta tabacco / Tobacco silk	0200-93-0A05
	Seta rosso / Red silk	0200-93-0A06
	Seta perla / Pearl silk	0200-93-0A07
	Lino bianco / White linen	0200-93-0A11
	Lino nero / Black linen	0200-93-0A12
	Lino sabbia / Sand linen	0200-93-0A13
	Lino tortora / Tortora linen	0200-93-0A14
	Lino melone / Melon linen	0200-93-0A15
	Lino grezzo / Unbleached linen	0200-93-0A16
	Linone corda / Corda lawn	0200-93-0A21
	Linone cocco / Cocco lawn	0200-93-0A22
	Linone melograno / Pomegranate lawn	0200-93-0A23
	Linone verde lime / Lime green lawn	0200-93-0A24
	Linone blue denim / Blue denim lawn	0200-93-0A25
	Linone tabacco / Tobacco lawn	0200-93-0A26
	Net avorio / Ivory net	0200-93-0A51
	Raso madreperla / Pearl silk satin	0200-93-0E01
	Raso fango/ Fango silk satin	0200-93-0E02
	Raso malva / Mauve silk satin	0200-93-0E03
	Raso blue marine / Blue marine silk satin	0200-93-0E06

NEW CLASSIC

0200-94
HIGH SEMICONE FLOOR SHADE

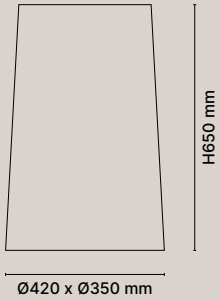

Peso / Weight: 0,7 kg

Dettagli Details	Tessuti Fabrics	Codice Code	Prezzo IVA ESC. Price VAT EXC.
Tessuti Cat. A / Fabrics Cat. A Tessuti Cat. B / Fabrics Cat. B Tessuti Cat. Extra / Fabrics Cat. Extra P. 114	Cotone bianco / White cotton	0200-94-0B01	€ 240,00
	Cotone beige / Beige cotton	0200-94-0B02	€ 240,00
	Cotone marrone / Brown cotton	0200-94-0B03	€ 240,00
	Cotone amaranto / Reddish purple cotton	0200-94-0B04	€ 240,00
	Cotone verde bottiglia / Bottle green cotton	0200-94-0B05	€ 240,00
	Pergamena bianco / White parchment	0200-94-0B11	€ 240,00
	Seta bianco / White silk	0200-94-0A01	€ 240,00
	Seta nero / Black silk	0200-94-0A02	€ 240,00
	Seta avorio / Ivory silk	0200-94-0A03	€ 240,00
	Seta ambra / Amber silk	0200-94-0A04	€ 240,00
	Seta tabacco / Tobacco silk	0200-94-0A05	€ 240,00
	Seta rosso / Red silk	0200-94-0A06	€ 240,00
	Seta perla / Pearl silk	0200-94-0A07	€ 240,00
	Lino bianco / White linen	0200-94-0A11	€ 240,00
	Lino nero / Black linen	0200-94-0A12	€ 240,00
	Lino sabbia / Sand linen	0200-94-0A13	€ 240,00
	Lino tortora / Tortora linen	0200-94-0A14	€ 240,00
	Lino melone / Melon linen	0200-94-0A15	€ 240,00
	Lino grezzo / Unbleached linen	0200-94-0A16	€ 240,00
	Linone corda / Corda lawn	0200-94-0A21	€ 240,00
	Linone cocco / Cocco lawn	0200-94-0A22	€ 240,00
	Linone melograno / Pomegranate lawn	0200-94-0A23	€ 240,00
	Linone verde lime / Lime green lawn	0200-94-0A24	€ 240,00
	Linone blue denim / Blue denim lawn	0200-94-0A25	€ 240,00
	Linone tabacco / Tobacco lawn	0200-94-0A26	€ 240,00
	Net avorio / Ivory net	0200-94-0A51	€ 240,00
	Raso madreperla / Pearl silk satin	0200-94-0E01	€ 460,00
	Raso fango/ Fango silk satin	0200-94-0E02	€ 460,00
	Raso malva / Mauve silk satin	0200-94-0E03	€ 460,00
	Raso blue marine / Blue marine silk satin	0200-94-0E06	€ 460,00

SLIDE

0604-40
SMALL ROUND WALL-CEILING

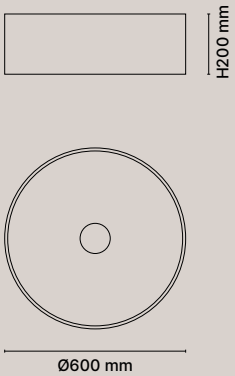

Peso / Weight: 3,5 kg

Dettagli
Details

3× 13W LED - E27
IP20

Tessuti Cat. A /
Fabrics Cat. A
Tessuti Cat. B /
Fabrics Cat. B
Tessuti Cat. Extra /
Fabrics Cat. Extra

Chiusura inferiore totale in plexiglass /
Complete plexiglass bottom closure

P. 114

Tessuti Fabrics	Codice Code
Cotone bianco / White cotton	0604-40-0B01-NXBE
Cotone beige / Beige cotton	0604-40-0B02-NXBE
Cotone marrone / Brown cotton	0604-40-0B03-NXBE
Cotone amaranto / Reddish purple cotton	0604-40-0B04-NXBE
Cotone verde bottiglia / Bottle green cotton	0604-40-0B05-NXBE
Pergamena bianco / White parchment	0604-40-0B11-NXBE
Seta bianco / White silk	0604-40-0A01-NXBE
Seta nero / Black silk	0604-40-0A02-NXBE
Seta avorio / Ivory silk	0604-40-0A03-NXBE
Seta ambra / Amber silk	0604-40-0A04-NXBE
Seta tabacco / Tobacco silk	0604-40-0A05-NXBE
Seta rosso / Red silk	0604-40-0A06-NXBE
Seta perla / Pearl silk	0604-40-0A07-NXBE
Lino bianco / White linen	0604-40-0A11-NXBE
Lino nero / Black linen	0604-40-0A12-NXBE
Lino sabbia / Sand linen	0604-40-0A13-NXBE
Lino tortora / Tortora linen	0604-40-0A14-NXBE
Lino melone / Melon linen	0604-40-0A15-NXBE
Lino grezzo / Unbleached linen	0604-40-0A16-NXBE
Linone corda / Corda lawn	0604-40-0A21-NXBE
Linone cocco / Cocco lawn	0604-40-0A22-NXBE
Linone melograno / Pomegranate lawn	0604-40-0A23-NXBE
Linone verde lime / Lime green lawn	0604-40-0A24-NXBE
Linone blue denim / Blue denim lawn	0604-40-0A25-NXBE
Linone tabacco / Tobacco lawn	0604-40-0A26-NXBE
Net avorio / Ivory net	0604-40-0A51-NXBE
Raso madreperla / Pearl silk satin	0604-40-0E01-NXBE
Raso fango/ Fango silk satin	0604-40-0E02-NXBE
Raso malva / Mauve silk satin	0604-40-0E03-NXBE
Raso blue marine / Blue marine silk satin	0604-40-0E06-NXBE

Accessori Accessories	Codice Code
Lampadina / Bulb LED E27 - 2700K	RIC.000088

SLIDE

0604-41
MEDIUM ROUND WALL-CEILING

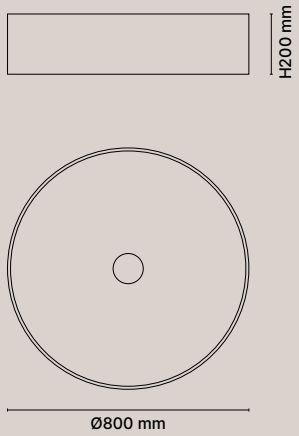

Peso / Weight: 4,0 kg

Dettagli
Details

3× 13W LED - E27
IP20

Tessuti Cat. A /
Fabrics Cat. A
Tessuti Cat. B /
Fabrics Cat. B
Tessuti Cat. Extra /
Fabrics Cat. Extra

Chiusura inferiore totale in plexiglass /
Complete plexiglass bottom closure

P. 114

Tessuti Fabrics	Codice Code
Cotone bianco / White cotton	0604-41-0B01-NXBE
Cotone beige / Beige cotton	0604-41-0B02-NXBE
Cotone marrone / Brown cotton	0604-41-0B03-NXBE
Cotone amaranto / Reddish purple cotton	0604-41-0B04-NXBE
Cotone verde bottiglia / Bottle green cotton	0604-41-0B05-NXBE
Pergamena bianco / White parchment	0604-41-0B11-NXBE
Seta bianco / White silk	0604-41-0A01-NXBE
Seta nero / Black silk	0604-41-0A02-NXBE
Seta avorio / Ivory silk	0604-41-0A03-NXBE
Seta ambra / Amber silk	0604-41-0A04-NXBE
Seta tabacco / Tobacco silk	0604-41-0A05-NXBE
Seta rosso / Red silk	0604-41-0A06-NXBE
Seta perla / Pearl silk	0604-41-0A07-NXBE
Lino bianco / White linen	0604-41-0A11-NXBE
Lino nero / Black linen	0604-41-0A12-NXBE
Lino sabbia / Sand linen	0604-41-0A13-NXBE
Lino tortora / Tortora linen	0604-41-0A14-NXBE
Lino melone / Melon linen	0604-41-0A15-NXBE
Lino grezzo / Unbleached linen	0604-41-0A16-NXBE
Linone corda / Corda lawn	0604-41-0A21-NXBE
Linone cocco / Cocco lawn	0604-41-0A22-NXBE
Linone melograno / Pomegranate lawn	0604-41-0A23-NXBE
Linone verde lime / Lime green lawn	0604-41-0A24-NXBE
Linone blue denim / Blue denim lawn	0604-41-0A25-NXBE
Linone tabacco / Tobacco lawn	0604-41-0A26-NXBE
Net avorio / Ivory net	0604-41-0A51-NXBE
Raso madreperla / Pearl silk satin	0604-41-0E01-NXBE
Raso fango/ Fango silk satin	0604-41-0E02-NXBE
Raso malva / Mauve silk satin	0604-41-0E03-NXBE
Raso blue marine / Blue marine silk satin	0604-41-0E06-NXBE

Accessori Accessories	Codice Code
Lampadina / Bulb LED E27 - 2700K	RIC.000088

SLIDE

0604-42
LARGE ROUND WALL-CEILING

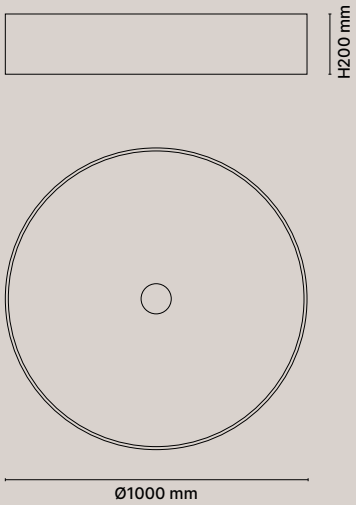

Peso / Weight: 6,5 kg

Dettagli
Details

3× 13W LED - E27
IP20

Tessuti Cat. A /
Fabrics Cat. A
Tessuti Cat. B /
Fabrics Cat. B
Tessuti Cat. Extra /
Fabrics Cat. Extra

Chiusura inferiore totale in plexiglass /
Complete plexiglass bottom closure

P. 114

Tessuti Fabrics	Codice Code
Cotone bianco / White cotton	0604-42-0B01-NXBE
Cotone beige / Beige cotton	0604-42-0B02-NXBE
Cotone marrone / Brown cotton	0604-42-0B03-NXBE
Cotone amaranto / Reddish purple cotton	0604-42-0B04-NXBE
Cotone verde bottiglia / Bottle green cotton	0604-42-0B05-NXBE
Pergamena bianco / White parchment	0604-42-0B11-NXBE
Seta bianco / White silk	0604-42-0A01-NXBE
Seta nero / Black silk	0604-42-0A02-NXBE
Seta avorio / Ivory silk	0604-42-0A03-NXBE
Seta ambra / Amber silk	0604-42-0A04-NXBE
Seta tabacco / Tobacco silk	0604-42-0A05-NXBE
Seta rosso / Red silk	0604-42-0A06-NXBE
Seta perla / Pearl silk	0604-42-0A07-NXBE
Lino bianco / White linen	0604-42-0A11-NXBE
Lino nero / Black linen	0604-42-0A12-NXBE
Lino sabbia / Sand linen	0604-42-0A13-NXBE
Lino tortora / Tortora linen	0604-42-0A14-NXBE
Lino melone / Melon linen	0604-42-0A15-NXBE
Lino grezzo / Unbleached linen	0604-42-0A16-NXBE
Linone corda / Corda lawn	0604-42-0A21-NXBE
Linone cocco / Cocco lawn	0604-42-0A22-NXBE
Linone melograno / Pomegranate lawn	0604-42-0A23-NXBE
Linone verde lime / Lime green lawn	0604-42-0A24-NXBE
Linone blue denim / Blue denim lawn	0604-42-0A25-NXBE
Linone tabacco / Tobacco lawn	0604-42-0A26-NXBE
Net avorio / Ivory net	0604-42-0A51-NXBE
Raso madreperla / Pearl silk satin	0604-42-0E01-NXBE
Raso fango/ Fango silk satin	0604-42-0E02-NXBE
Raso malva / Mauve silk satin	0604-42-0E03-NXBE
Raso blue marine / Blue marine silk satin	0604-42-0E06-NXBE

Accessori Accessories	Codice Code
Lampadina / Bulb LED E27 - 2700K	RIC.000088

SLIDE

1005-40
SMALL SQUARE WALL-CEILING

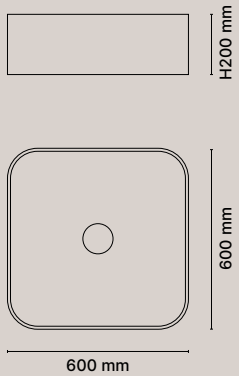

Peso / Weight: 3,5 kg

Dettagli
Details

3× 13W LED - E27
IP20

Tessuti Cat. A /
Fabrics Cat. A
Tessuti Cat. B /
Fabrics Cat. B
Tessuti Cat. Extra /
Fabrics Cat. Extra

Chiusura inferiore totale in plexiglass /
Complete plexiglass bottom closure

P. 114

Tessuti Fabrics	Codice Code
Cotone bianco / White cotton	1005-40-0B01-NXBE
Cotone beige / Beige cotton	1005-40-0B02-NXBE
Cotone marrone / Brown cotton	1005-40-0B03-NXBE
Cotone amaranto / Reddish purple cotton	1005-40-0B04-NXBE
Cotone verde bottiglia / Bottle green cotton	1005-40-0B05-NXBE
Pergamena bianco / White parchment	1005-40-0B11-NXBE
Seta bianco / White silk	1005-40-0A01-NXBE
Seta nero / Black silk	1005-40-0A02-NXBE
Seta avorio / Ivory silk	1005-40-0A03-NXBE
Seta ambra / Amber silk	1005-40-0A04-NXBE
Seta tabacco / Tobacco silk	1005-40-0A05-NXBE
Seta rosso / Red silk	1005-40-0A06-NXBE
Seta perla / Pearl silk	1005-40-0A07-NXBE
Lino bianco / White linen	1005-40-0A11-NXBE
Lino nero / Black linen	1005-40-0A12-NXBE
Lino sabbia / Sand linen	1005-40-0A13-NXBE
Lino tortora / Tortora linen	1005-40-0A14-NXBE
Lino melone / Melon linen	1005-40-0A15-NXBE
Lino grezzo / Unbleached linen	1005-40-0A16-NXBE
Linone corda / Corda lawn	1005-40-0A21-NXBE
Linone cocco / Cocco lawn	1005-40-0A22-NXBE
Linone melograno / Pomegranate lawn	1005-40-0A23-NXBE
Linone verde lime / Lime green lawn	1005-40-0A24-NXBE
Linone blue denim / Blue denim lawn	1005-40-0A25-NXBE
Linone tabacco / Tobacco lawn	1005-40-0A26-NXBE
Net avorio / Ivory net	1005-40-0A51-NXBE
Raso madreperla / Pearl silk satin	1005-40-0E01-NXBE
Raso fango/ Fango silk satin	1005-40-0E02-NXBE
Raso malva / Mauve silk satin	1005-40-0E03-NXBE
Raso blue marine / Blue marine silk satin	1005-40-0E06-NXBE

Accessori Accessories	Codice Code
Lampadina / Bulb LED E27 - 2700K	RIC.000088

SLIDE

1005-41
MEDIUM SQUARE WALL-CEILING

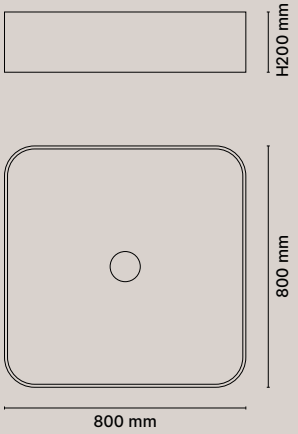

Peso / Weight: 4,0 kg

Dettagli
Details

3× 13W LED - E27
IP20

Tessuti Cat. A /
Fabrics Cat. A
Tessuti Cat. B /
Fabrics Cat. B
Tessuti Cat. Extra /
Fabrics Cat. Extra

Chiusura inferiore totale in plexiglass /
Complete plexiglass bottom closure

P. 114

Tessuti Fabrics	Codice Code
Cotone bianco / White cotton	1005-41-0B01-NXBE
Cotone beige / Beige cotton	1005-41-0B02-NXBE
Cotone marrone / Brown cotton	1005-41-0B03-NXBE
Cotone amaranto / Reddish purple cotton	1005-41-0B04-NXBE
Cotone verde bottiglia / Bottle green cotton	1005-41-0B05-NXBE
Pergamena bianco / White parchment	1005-41-0B11-NXBE
Seta bianco / White silk	1005-41-0A01-NXBE
Seta nero / Black silk	1005-41-0A02-NXBE
Seta avorio / Ivory silk	1005-41-0A03-NXBE
Seta ambra / Amber silk	1005-41-0A04-NXBE
Seta tabacco / Tobacco silk	1005-41-0A05-NXBE
Seta rosso / Red silk	1005-41-0A06-NXBE
Seta perla / Pearl silk	1005-41-0A07-NXBE
Lino bianco / White linen	1005-41-0A11-NXBE
Lino nero / Black linen	1005-41-0A12-NXBE
Lino sabbia / Sand linen	1005-41-0A13-NXBE
Lino tortora / Tortora linen	1005-41-0A14-NXBE
Lino melone / Melon linen	1005-41-0A15-NXBE
Lino grezzo / Unbleached linen	1005-41-0A16-NXBE
Linone corda / Corda lawn	1005-41-0A21-NXBE
Linone cocco / Cocco lawn	1005-41-0A22-NXBE
Linone melograno / Pomegranate lawn	1005-41-0A23-NXBE
Linone verde lime / Lime green lawn	1005-41-0A24-NXBE
Linone blue denim / Blue denim lawn	1005-41-0A25-NXBE
Linone tabacco / Tobacco lawn	1005-41-0A26-NXBE
Net avorio / Ivory net	1005-41-0A51-NXBE
Raso madreperla / Pearl silk satin	1005-41-0E01-NXBE
Raso fango/ Fango silk satin	1005-41-0E02-NXBE
Raso malva / Mauve silk satin	1005-41-0E03-NXBE
Raso blue marine / Blue marine silk satin	1005-41-0E06-NXBE

Accessori Accessories	Codice Code
Lampadina / Bulb LED E27 - 2700K	RIC.000088

SLIDE

1005-42
LARGE SQUARE WALL-CEILING

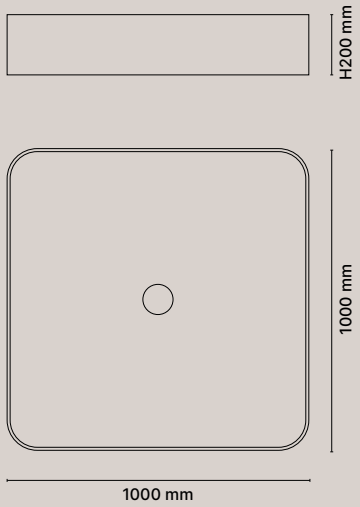

Peso / Weight: 6,5 kg

Dettagli
Details

3× 13W LED - E27
IP20

Tessuti Cat. A /
Fabrics Cat. A
Tessuti Cat. B /
Fabrics Cat. B
Tessuti Cat. Extra /
Fabrics Cat. Extra

Chiusura inferiore totale in plexiglass /
Complete plexiglass bottom closure

P. 114

Tessuti Fabrics	Codice Code
Cotone bianco / White cotton	1005-42-0B01-NXBE
Cotone beige / Beige cotton	1005-42-0B02-NXBE
Cotone marrone / Brown cotton	1005-42-0B03-NXBE
Cotone amaranto / Reddish purple cotton	1005-42-0B04-NXBE
Cotone verde bottiglia / Bottle green cotton	1005-42-0B05-NXBE
Pergamena bianco / White parchment	1005-42-0B11-NXBE
Seta bianco / White silk	1005-42-0A01-NXBE
Seta nero / Black silk	1005-42-0A02-NXBE
Seta avorio / Ivory silk	1005-42-0A03-NXBE
Seta ambra / Amber silk	1005-42-0A04-NXBE
Seta tabacco / Tobacco silk	1005-42-0A05-NXBE
Seta rosso / Red silk	1005-42-0A06-NXBE
Seta perla / Pearl silk	1005-42-0A07-NXBE
Lino bianco / White linen	1005-42-0A11-NXBE
Lino nero / Black linen	1005-42-0A12-NXBE
Lino sabbia / Sand linen	1005-42-0A13-NXBE
Lino tortora / Tortora linen	1005-42-0A14-NXBE
Lino melone / Melon linen	1005-42-0A15-NXBE
Lino grezzo / Unbleached linen	1005-42-0A16-NXBE
Linone corda / Corda lawn	1005-42-0A21-NXBE
Linone cocco / Cocco lawn	1005-42-0A22-NXBE
Linone melograno / Pomegranate lawn	1005-42-0A23-NXBE
Linone verde lime / Lime green lawn	1005-42-0A24-NXBE
Linone blue denim / Blue denim lawn	1005-42-0A25-NXBE
Linone tabacco / Tobacco lawn	1005-42-0A26-NXBE
Net avorio / Ivory net	1005-42-0A51-NXBE
Raso madreperla / Pearl silk satin	1005-42-0E01-NXBE
Raso fango/ Fango silk satin	1005-42-0E02-NXBE
Raso malva / Mauve silk satin	1005-42-0E03-NXBE
Raso blue marine / Blue marine silk satin	1005-42-0E06-NXBE

Accessori Accessories	Codice Code
Lampadina / Bulb LED E27 - 2700K	RIC.000088

SOSPENSIONI TESSUTO

9229-20
CYLINDER Ø20 SUSPENSION

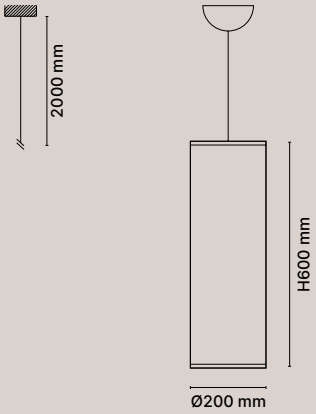

Peso / Weight: 0,9 kg

Dettagli
Details

1× 13W LED - E27
IP20

Tessuti Cat. A /
Fabrics Cat. A
Tessuti Cat. B /
Fabrics Cat. B
Tessuti Cat. Extra, Club House /
Fabrics Cat. Extra, Club House

P. 114

Tessuti Fabrics	Codice Code
Cotone bianco / White cotton	9229-20-0B01-N2BE
Cotone beige / Beige cotton	9229-20-0B02-N2BE
Cotone marrone / Brown cotton	9229-20-0B03-N2BE
Cotone amaranto / Reddish purple cotton	9229-20-0B04-N2BE
Cotone verde bottiglia / Bottle green cotton	9229-20-0B05-N2BE
Pergamena bianco / White parchment	9229-20-0B11-N2BE
Seta bianco / White silk	9229-20-0A01-N2BE
Seta nero / Black silk	9229-20-0A02-N2BE
Seta avorio / Ivory silk	9229-20-0A03-N2BE
Seta ambra / Amber silk	9229-20-0A04-N2BE
Seta tabacco / Tobacco silk	9229-20-0A05-N2BE
Seta rosso / Red silk	9229-20-0A06-N2BE
Seta perla / Pearl silk	9229-20-0A07-N2BE
Lino bianco / White linen	9229-20-0A11-N2BE
Lino nero / Black linen	9229-20-0A12-N2BE
Lino sabbia / Sand linen	9229-20-0A13-N2BE
Lino tortora / Tortora linen	9229-20-0A14-N2BE
Lino melone / Melon linen	9229-20-0A15-N2BE
Lino grezzo / Unbleached linen	9229-20-0A16-N2BE
Linone corda / Corda lawn	9229-20-0A21-N2BE
Linone cocco / Cocco lawn	9229-20-0A22-N2BE
Linone melograno / Pomegranate lawn	9229-20-0A23-N2BE
Linone verde lime / Lime green lawn	9229-20-0A24-N2BE
Linone blue denim / Blue denim lawn	9229-20-0A25-N2BE
Linone tabacco / Tobacco lawn	9229-20-0A26-N2BE
Net avorio / Ivory net	9229-20-0A51-N2BE
Raso madreperla / Pearl silk satin	9229-20-0E01-N2BE
Raso fango / Fango silk satin	9229-20-0E02-N2BE
Raso malva / Mauve silk satin	9229-20-0E03-N2BE
Raso blue marine / Blue marine silk satin	9229-20-0E06-N2BE
Linone blue denim / Blue denim lawn	9229-20-0C01-N2BE
Linone melograno / Pomegranate lawn	9229-20-0C02-N2BE
Linone verde lime / Lime green lawn	9229-20-0C03-N2BE
Linone cocco / Cocco lawn	9229-20-0C04-N2BE
Linone corda / Cord lawn	9229-20-0C05-N2BE
Raso blue marine / Blue marine silk satin	9229-20-0C11-N2BE
Raso malva / Mauve silk satin	9229-20-0C12-N2BE
Raso fango / Fango silk satin	9229-20-0C14-N2BE
Raso madreperla / Pearl silk satin	9229-20-0C15-N2BE

Accessori Accessories	Codice Code
Lampadina / Bulb LED E27 - 2700K	RIC.000088

SOSPENSIONI TESSUTO

9229-21
CYLINDER Ø30 SUSPENSION

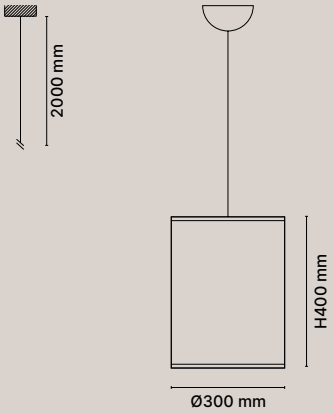

Peso / Weight: 0,9 kg

Dettagli
Details

1× 13W LED - E27
IP20

Tessuti Cat. A /
Fabrics Cat. A
Tessuti Cat. B /
Fabrics Cat. B
Tessuti Cat. Extra, Club House /
Fabrics Cat. Extra, Club House

P. 114

Tessuti Fabrics	Codice Code
Cotone bianco / White cotton	9229-21-0B01-N2BE
Cotone beige / Beige cotton	9229-21-0B02-N2BE
Cotone marrone / Brown cotton	9229-21-0B03-N2BE
Cotone amaranto / Reddish purple cotton	9229-21-0B04-N2BE
Cotone verde bottiglia / Bottle green cotton	9229-21-0B05-N2BE
Pergamena bianco / White parchment	9229-21-0B11-N2BE
Seta bianco / White silk	9229-21-0A01-N2BE
Seta nero / Black silk	9229-21-0A02-N2BE
Seta avorio / Ivory silk	9229-21-0A03-N2BE
Seta ambra / Amber silk	9229-21-0A04-N2BE
Seta tabacco / Tobacco silk	9229-21-0A05-N2BE
Seta rosso / Red silk	9229-21-0A06-N2BE
Seta perla / Pearl silk	9229-21-0A07-N2BE
Lino bianco / White linen	9229-21-0A11-N2BE
Lino nero / Black linen	9229-21-0A12-N2BE
Lino sabbia / Sand linen	9229-21-0A13-N2BE
Lino tortora / Tortora linen	9229-21-0A14-N2BE
Lino melone / Melon linen	9229-21-0A15-N2BE
Lino grezzo / Unbleached linen	9229-21-0A16-N2BE
Linone corda / Corda lawn	9229-21-0A21-N2BE
Linone cocco / Cocco lawn	9229-21-0A22-N2BE
Linone melograno / Pomegranate lawn	9229-21-0A23-N2BE
Linone verde lime / Lime green lawn	9229-21-0A24-N2BE
Linone blue denim / Blue denim lawn	9229-21-0A25-N2BE
Linone tabacco / Tobacco lawn	9229-21-0A26-N2BE
Net avorio / Ivory net	9229-21-0A51-N2BE
Raso madreperla / Pearl silk satin	9229-21-0E01-N2BE
Raso fango / Fango silk satin	9229-21-0E02-N2BE
Raso malva / Mauve silk satin	9229-21-0E03-N2BE
Raso blue marine / Blue marine silk satin	9229-21-0E06-N2BE
Linone blue denim / Blue denim lawn	9229-21-0C01-N2BE
Linone melograno / Pomegranate lawn	9229-21-0C02-N2BE
Linone verde lime / Lime green lawn	9229-21-0C03-N2BE
Linone cocco / Cocco lawn	9229-21-0C04-N2BE
Linone corda / Cord lawn	9229-21-0C05-N2BE
Raso blue marine / Blue marine silk satin	9229-21-0C11-N2BE
Raso malva / Mauve silk satin	9229-21-0C12-N2BE
Raso fango / Fango silk satin	9229-21-0C14-N2BE
Raso madreperla / Pearl silk satin	9229-21-0C15-N2BE

Accessori Accessories	Codice Code
Lampadina / Bulb LED E27 - 2700K	RIC.000088

SOSPENSIONI TESSUTO

9229-22
CYLINDER Ø40 SUSPENSION

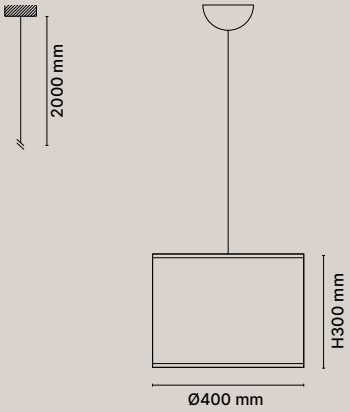

Peso / Weight: 0,9 kg

Dettagli
Details

1× 13W LED - E27
IP20

Tessuti Cat. A /
Fabrics Cat. A
Tessuti Cat. B /
Fabrics Cat. B
Tessuti Cat. Extra, Club House /
Fabrics Cat. Extra, Club House

P. 114

Tessuti Fabrics	Codice Code
Cotone bianco / White cotton	9229-22-0B01-N2BE
Cotone beige / Beige cotton	9229-22-0B02-N2BE
Cotone marrone / Brown cotton	9229-22-0B03-N2BE
Cotone amaranto / Reddish purple cotton	9229-22-0B04-N2BE
Cotone verde bottiglia / Bottle green cotton	9229-22-0B05-N2BE
Pergamena bianco / White parchment	9229-22-0B11-N2BE
Seta bianco / White silk	9229-22-0A01-N2BE
Seta nero / Black silk	9229-22-0A02-N2BE
Seta avorio / Ivory silk	9229-22-0A03-N2BE
Seta ambra / Amber silk	9229-22-0A04-N2BE
Seta tabacco / Tobacco silk	9229-22-0A05-N2BE
Seta rosso / Red silk	9229-22-0A06-N2BE
Seta perla / Pearl silk	9229-22-0A07-N2BE
Lino bianco / White linen	9229-22-0A11-N2BE
Lino nero / Black linen	9229-22-0A12-N2BE
Lino sabbia / Sand linen	9229-22-0A13-N2BE
Lino tortora / Tortora linen	9229-22-0A14-N2BE
Lino melone / Melon linen	9229-22-0A15-N2BE
Lino grezzo / Unbleached linen	9229-22-0A16-N2BE
Linone corda / Corda lawn	9229-22-0A21-N2BE
Linone cocco / Cocco lawn	9229-22-0A22-N2BE
Linone melograno / Pomegranate lawn	9229-22-0A23-N2BE
Linone verde lime / Lime green lawn	9229-22-0A24-N2BE
Linone blue denim / Blue denim lawn	9229-22-0A25-N2BE
Linone tabacco / Tobacco lawn	9229-22-0A26-N2BE
Net avorio / Ivory net	9229-22-0A51-N2BE
Raso madreperla / Pearl silk satin	9229-22-0E01-N2BE
Raso fango / Fango silk satin	9229-22-0E02-N2BE
Raso malva / Mauve silk satin	9229-22-0E03-N2BE
Raso blue marine / Blue marine silk satin	9229-22-0E06-N2BE
Linone blue denim / Blue denim lawn	9229-22-0C01-N2BE
Linone melograno / Pomegranate lawn	9229-22-0C02-N2BE
Linone verde lime / Lime green lawn	9229-22-0C03-N2BE
Linone cocco / Cocco lawn	9229-22-0C04-N2BE
Linone corda / Cord lawn	9229-22-0C05-N2BE
Raso blue marine / Blue marine silk satin	9229-22-0C11-N2BE
Raso malva / Mauve silk satin	9229-22-0C12-N2BE
Raso fango / Fango silk satin	9229-22-0C14-N2BE
Raso madreperla / Pearl silk satin	9229-22-0C15-N2BE

Accessori Accessories	Codice Code
Lampadina / Bulb LED E27 - 2700K	RIC.000088

SOSPENSIONI TESSUTO

9229-23
CYLINDER Ø50 SUSPENSION

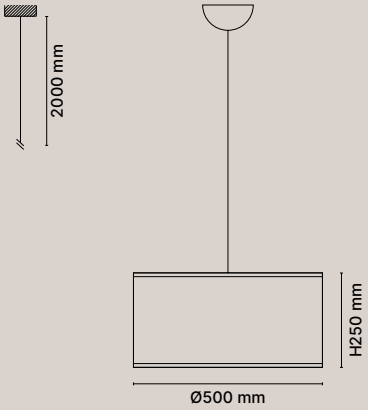

Peso / Weight: 1,0 kg

Dettagli
Details

1× 13W LED - E27
IP20

Tessuti Cat. A /
Fabrics Cat. A
Tessuti Cat. B /
Fabrics Cat. B
Tessuti Cat. Extra, Club House /
Fabrics Cat. Extra, Club House

P. 114

Tessuti Fabrics	Codice Code
Cotone bianco / White cotton	9229-23-0B01-N2BE
Cotone beige / Beige cotton	9229-23-0B02-N2BE
Cotone marrone / Brown cotton	9229-23-0B03-N2BE
Cotone amaranto / Reddish purple cotton	9229-23-0B04-N2BE
Cotone verde bottiglia / Bottle green cotton	9229-23-0B05-N2BE
Pergamena bianco / White parchment	9229-23-0B11-N2BE
Seta bianco / White silk	9229-23-0A01-N2BE
Seta nero / Black silk	9229-23-0A02-N2BE
Seta avorio / Ivory silk	9229-23-0A03-N2BE
Seta ambra / Amber silk	9229-23-0A04-N2BE
Seta tabacco / Tobacco silk	9229-23-0A05-N2BE
Seta rosso / Red silk	9229-23-0A06-N2BE
Seta perla / Pearl silk	9229-23-0A07-N2BE
Lino bianco / White linen	9229-23-0A11-N2BE
Lino nero / Black linen	9229-23-0A12-N2BE
Lino sabbia / Sand linen	9229-23-0A13-N2BE
Lino tortora / Tortora linen	9229-23-0A14-N2BE
Lino melone / Melon linen	9229-23-0A15-N2BE
Lino grezzo / Unbleached linen	9229-23-0A16-N2BE
Linone corda / Corda lawn	9229-23-0A21-N2BE
Linone cocco / Cocco lawn	9229-23-0A22-N2BE
Linone melograno / Pomegranate lawn	9229-23-0A23-N2BE
Linone verde lime / Lime green lawn	9229-23-0A24-N2BE
Linone blue denim / Blue denim lawn	9229-23-0A25-N2BE
Linone tabacco / Tobacco lawn	9229-23-0A26-N2BE
Net avorio / Ivory net	9229-23-0A51-N2BE
Raso madreperla / Pearl silk satin	9229-23-0E01-N2BE
Raso fango / Fango silk satin	9229-23-0E02-N2BE
Raso malva / Mauve silk satin	9229-23-0E03-N2BE
Raso blue marine / Blue marine silk satin	9229-23-0E06-N2BE
Linone blue denim / Blue denim lawn	9229-23-0C01-N2BE
Linone melograno / Pomegranate lawn	9229-23-0C02-N2BE
Linone verde lime / Lime green lawn	9229-23-0C03-N2BE
Linone cocco / Cocco lawn	9229-23-0C04-N2BE
Linone corda / Cord lawn	9229-23-0C05-N2BE
Raso blue marine / Blue marine silk satin	9229-23-0C11-N2BE
Raso malva / Mauve silk satin	9229-23-0C12-N2BE
Raso fango / Fango silk satin	9229-23-0C14-N2BE
Raso madreperla / Pearl silk satin	9229-23-0C15-N2BE

Accessori Accessories	Codice Code
Lampadina / Bulb LED E27 - 2700K	RIC.000088

SOSPENSIONI TESSUTO

9229-24
CYLINDER Ø60 SUSPENSION

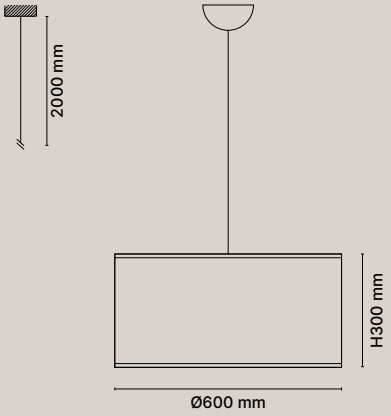

Peso / Weight: 1,3 kg

Dettagli
Details

1/3× 13W LED - E27
IP20

Tessuti Cat. A /
Fabrics Cat. A
Tessuti Cat. B /
Fabrics Cat. B
Tessuti Cat. Extra, Club House /
Fabrics Cat. Extra, Club House

P. 114

Tessuti Fabrics	Codice Code
Cotone bianco / White cotton	9229-24-*B01-N2BE
Cotone beige / Beige cotton	9229-24-*B02-N2BE
Cotone marrone / Brown cotton	9229-24-*B03-N2BE
Cotone amaranto / Reddish purple cotton	9229-24-*B04-N2BE
Cotone verde bottiglia / Bottle green cotton	9229-24-*B05-N2BE
Pergamena bianco / White parchment	9229-24-*B11-N2BE
Seta bianco / White silk	9229-24-*A01-N2BE
Seta nero / Black silk	9229-24-*A02-N2BE
Seta avorio / Ivory silk	9229-24-*A03-N2BE
Seta ambra / Amber silk	9229-24-*A04-N2BE
Seta tabacco / Tobacco silk	9229-24-*A05-N2BE
Seta rosso / Red silk	9229-24-*A06-N2BE
Seta perla / Pearl silk	9229-24-*A07-N2BE
Lino bianco / White linen	9229-24-*A11-N2BE
Lino nero / Black linen	9229-24-*A12-N2BE
Lino sabbia / Sand linen	9229-24-*A13-N2BE
Lino tortora / Tortora linen	9229-24-*A14-N2BE
Lino melone / Melon linen	9229-24-*A15-N2BE
Lino grezzo / Unbleached linen	9229-24-*A16-N2BE
Linone corda / Corda lawn	9229-24-*A21-N2BE
Linone cocco / Cocco lawn	9229-24-*A22-N2BE
Linone melograno / Pomegranate lawn	9229-24-*A23-N2BE
Linone verde lime / Lime green lawn	9229-24-*A24-N2BE
Linone blue denim / Blue denim lawn	9229-24-*A25-N2BE
Linone tabacco / Tobacco lawn	9229-24-*A26-N2BE
Net avorio / Ivory net	9229-24-*A51-N2BE
Raso madreperla / Pearl silk satin	9229-24-*E01-N2BE
Raso fango / Fango silk satin	9229-24-*E02-N2BE
Raso malva / Mauve silk satin	9229-24-*E03-N2BE
Raso blue marine / Blue marine silk satin	9229-24-*E06-N2BE
Linone blue denim / Blue denim lawn	9229-24-*C01-N2BE
Linone melograno / Pomegranate lawn	9229-24-*C02-N2BE
Linone verde lime / Lime green lawn	9229-24-*C03-N2BE
Linone cocco / Cocco lawn	9229-24-*C04-N2BE
Linone corda / Cord lawn	9229-24-*C05-N2BE
Raso blue marine / Blue marine silk satin	9229-24-*C11-N2BE
Raso malva / Mauve silk satin	9229-24-*C12-N2BE
Raso fango / Fango silk satin	9229-24-*C14-N2BE
Raso madreperla / Pearl silk satin	9229-24-*C15-N2BE

Sostituire l'asterisco presente nel codice con il carattere corrispondente indicato nella legenda e aggiungere il relativo prezzo. / Replace the asterisk in the code with the corresponding character indicated in the legend and add the respective price.

Dettagli Details	Legenda Legend
1xE27	*0
3xE27	*3
1xE27+chiusura PVC bianco/white PVC closure	*C
3xE27+chiusura PVC bianco/white PVC closure	*T

Accessori Accessories	Codice Code
Lampadina / Bulb LED E27 - 2700K	RIC.000088

SOSPENSIONI TESSUTO

9229-25
CYLINDER Ø70 SUSPENSION

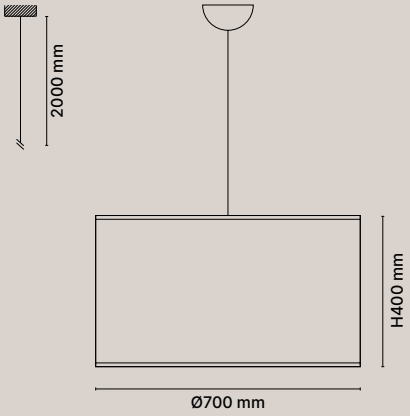

Peso / Weight: 1,4 kg

Dettagli
Details

1/3× 13W LED - E27
IP20

Tessuti Cat. A /
Fabrics Cat. A
Tessuti Cat. B /
Fabrics Cat. B
Tessuti Cat. Extra, Club House /
Fabrics Cat. Extra, Club House

P. 114

Tessuti Fabrics	Codice Code
Cotone bianco / White cotton	9229-25-*B01-N2BE
Cotone beige / Beige cotton	9229-25-*B02-N2BE
Cotone marrone / Brown cotton	9229-25-*B03-N2BE
Cotone amaranto / Reddish purple cotton	9229-25-*B04-N2BE
Cotone verde bottiglia / Bottle green cotton	9229-25-*B05-N2BE
Pergamena bianco / White parchment	9229-25-*B11-N2BE
Seta bianco / White silk	9229-25-*A01-N2BE
Seta nero / Black silk	9229-25-*A02-N2BE
Seta avorio / Ivory silk	9229-25-*A03-N2BE
Seta ambra / Amber silk	9229-25-*A04-N2BE
Seta tabacco / Tobacco silk	9229-25-*A05-N2BE
Seta rosso / Red silk	9229-25-*A06-N2BE
Seta perla / Pearl silk	9229-25-*A07-N2BE
Lino bianco / White linen	9229-25-*A11-N2BE
Lino nero / Black linen	9229-25-*A12-N2BE
Lino sabbia / Sand linen	9229-25-*A13-N2BE
Lino tortora / Tortora linen	9229-25-*A14-N2BE
Lino melone / Melon linen	9229-25-*A15-N2BE
Lino grezzo / Unbleached linen	9229-25-*A16-N2BE
Linone corda / Corda lawn	9229-25-*A21-N2BE
Linone cocco / Cocco lawn	9229-25-*A22-N2BE
Linone melograno / Pomegranate lawn	9229-25-*A23-N2BE
Linone verde lime / Lime green lawn	9229-25-*A24-N2BE
Linone blue denim / Blue denim lawn	9229-25-*A25-N2BE
Linone tabacco / Tobacco lawn	9229-25-*A26-N2BE
Net avorio / Ivory net	9229-25-*A51-N2BE
Raso madreperla / Pearl silk satin	9229-25-*E01-N2BE
Raso fango / Fango silk satin	9229-25-*E02-N2BE
Raso malva / Mauve silk satin	9229-25-*E03-N2BE
Raso blue marine / Blue marine silk satin	9229-25-*E06-N2BE
Linone blue denim / Blue denim lawn	9229-25-*C01-N2BE
Linone melograno / Pomegranate lawn	9229-25-*C02-N2BE
Linone verde lime / Lime green lawn	9229-25-*C03-N2BE
Linone cocco / Cocco lawn	9229-25-*C04-N2BE
Linone corda / Cord lawn	9229-25-*C05-N2BE
Raso blue marine / Blue marine silk satin	9229-25-*C11-N2BE
Raso malva / Mauve silk satin	9229-25-*C12-N2BE
Raso fango / Fango silk satin	9229-25-*C14-N2BE
Raso madreperla / Pearl silk satin	9229-25-*C15-N2BE

Sostituire l'asterisco presente nel codice con il carattere corrispondente indicato nella legenda e aggiungere il relativo prezzo. / Replace the asterisk in the code with the corresponding character indicated in the legend and add the respective price.

Dettagli Details	Legenda Legend
1xE27	*0
3xE27	*3
1xE27+chiusura PVC bianco/white PVC closure	*C
3xE27+chiusura PVC bianco/white PVC closure	*T

Accessori Accessories	Codice Code
Lampadina / Bulb LED E27 - 2700K	RIC.000088

SOSPENSIONI TESSUTO

9229-26
CYLINDER Ø80 SUSPENSION

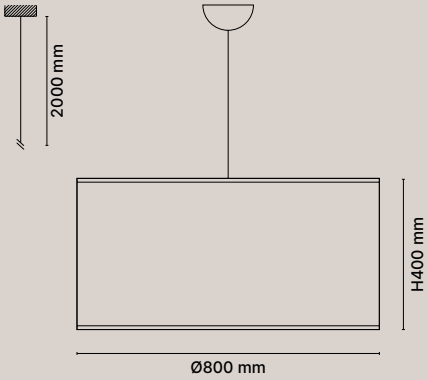

Peso / Weight: 3,0 kg

Dettagli
Details

1/3× 13W LED - E27
IP20

Tessuti Cat. A /
Fabrics Cat. A
Tessuti Cat. B /
Fabrics Cat. B
Tessuti Cat. Extra, Club House /
Fabrics Cat. Extra, Club House

P. 114

Tessuti Fabrics	Codice Code
Cotone bianco / White cotton	9229-26-*B01-N2BE
Cotone beige / Beige cotton	9229-26-*B02-N2BE
Cotone marrone / Brown cotton	9229-26-*B03-N2BE
Cotone amaranto / Reddish purple cotton	9229-26-*B04-N2BE
Cotone verde bottiglia / Bottle green cotton	9229-26-*B05-N2BE
Pergamena bianco / White parchment	9229-26-*B11-N2BE
Seta bianco / White silk	9229-26-*A01-N2BE
Seta nero / Black silk	9229-26-*A02-N2BE
Seta avorio / Ivory silk	9229-26-*A03-N2BE
Seta ambra / Amber silk	9229-26-*A04-N2BE
Seta tabacco / Tobacco silk	9229-26-*A05-N2BE
Seta rosso / Red silk	9229-26-*A06-N2BE
Seta perla / Pearl silk	9229-26-*A07-N2BE
Lino bianco / White linen	9229-26-*A11-N2BE
Lino nero / Black linen	9229-26-*A12-N2BE
Lino sabbia / Sand linen	9229-26-*A13-N2BE
Lino tortora / Tortora linen	9229-26-*A14-N2BE
Lino melone / Melon linen	9229-26-*A15-N2BE
Lino grezzo / Unbleached linen	9229-26-*A16-N2BE
Linone corda / Corda lawn	9229-26-*A21-N2BE
Linone cocco / Cocco lawn	9229-26-*A22-N2BE
Linone melograno / Pomegranate lawn	9229-26-*A23-N2BE
Linone verde lime / Lime green lawn	9229-26-*A24-N2BE
Linone blue denim / Blue denim lawn	9229-26-*A25-N2BE
Linone tabacco / Tobacco lawn	9229-26-*A26-N2BE
Net avorio / Ivory net	9229-26-*A51-N2BE
Raso madreperla / Pearl silk satin	9229-26-*E01-N2BE
Raso fango / Fango silk satin	9229-26-*E02-N2BE
Raso malva / Mauve silk satin	9229-26-*E03-N2BE
Raso blue marine / Blue marine silk satin	9229-26-*E06-N2BE
Linone blue denim / Blue denim lawn	9229-26-*C01-N2BE
Linone melograno / Pomegranate lawn	9229-26-*C02-N2BE
Linone verde lime / Lime green lawn	9229-26-*C03-N2BE
Linone cocco / Cocco lawn	9229-26-*C04-N2BE
Linone corda / Cord lawn	9229-26-*C05-N2BE
Raso blue marine / Blue marine silk satin	9229-26-*C11-N2BE
Raso malva / Mauve silk satin	9229-26-*C12-N2BE
Raso fango / Fango silk satin	9229-26-*C14-N2BE
Raso madreperla / Pearl silk satin	9229-26-*C15-N2BE

Sostituire l'asterisco presente nel codice con il carattere corrispondente indicato nella legenda e aggiungere il relativo prezzo. /
Replace the asterisk in the code with the corresponding character indicated in the legend and add the respective prezzo.

Dettagli Details	Legenda Legend
1xE27	*0
3xE27	*3
1xE27+chiusura PVC bianco/white PVC closure	*C
3xE27+chiusura PVC bianco/white PVC closure	*T

Accessori Accessories	Codice Code
Lampadina / Bulb LED E27 - 2700K	RIC.000088

SOSPENSIONI TESSUTO

9229-27
CYLINDER Ø100 SUSPENSION

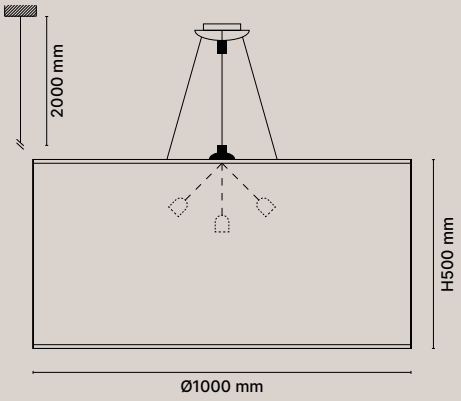

Peso / Weight: 4,0 kg

Dettagli
Details

3× 13W LED - E27
IP20

Tessuti Cat. A /
Fabrics Cat. A
Tessuti Cat. B /
Fabrics Cat. B
Tessuti Cat. Extra, Club House /
Fabrics Cat. Extra, Club House

P. 114

Tessuti Fabrics	Codice Code
Cotone bianco / White cotton	9229-27-*B01-N2BE
Cotone beige / Beige cotton	9229-27-*B02-N2BE
Cotone marrone / Brown cotton	9229-27-*B03-N2BE
Cotone amaranto / Reddish purple cotton	9229-27-*B04-N2BE
Cotone verde bottiglia / Bottle green cotton	9229-27-*B05-N2BE
Pergamena bianco / White parchment	9229-27-*B11-N2BE
Seta bianco / White silk	9229-27-*A01-N2BE
Seta nero / Black silk	9229-27-*A02-N2BE
Seta avorio / Ivory silk	9229-27-*A03-N2BE
Seta ambra / Amber silk	9229-27-*A04-N2BE
Seta tabacco / Tobacco silk	9229-27-*A05-N2BE
Seta rosso / Red silk	9229-27-*A06-N2BE
Seta perla / Pearl silk	9229-27-*A07-N2BE
Lino bianco / White linen	9229-27-*A11-N2BE
Lino nero / Black linen	9229-27-*A12-N2BE
Lino sabbia / Sand linen	9229-27-*A13-N2BE
Lino tortora / Tortora linen	9229-27-*A14-N2BE
Lino melone / Melon linen	9229-27-*A15-N2BE
Lino grezzo / Unbleached linen	9229-27-*A16-N2BE
Linone corda / Corda lawn	9229-27-*A21-N2BE
Linone cocco / Cocco lawn	9229-27-*A22-N2BE
Linone melograno / Pomegranate lawn	9229-27-*A23-N2BE
Linone verde lime / Lime green lawn	9229-27-*A24-N2BE
Linone blue denim / Blue denim lawn	9229-27-*A25-N2BE
Linone tabacco / Tobacco lawn	9229-27-*A26-N2BE
Net avorio / Ivory net	9229-27-*A51-N2BE
Raso madreperla / Pearl silk satin	9229-27-*E01-N2BE
Raso fango / Fango silk satin	9229-27-*E02-N2BE
Raso malva / Mauve silk satin	9229-27-*E03-N2BE
Raso blue marine / Blue marine silk satin	9229-27-*E06-N2BE
Linone blue denim / Blue denim lawn	9229-27-*C01-N2BE
Linone melograno / Pomegranate lawn	9229-27-*C02-N2BE
Linone verde lime / Lime green lawn	9229-27-*C03-N2BE
Linone cocco / Cocco lawn	9229-27-*C04-N2BE
Linone corda / Cord lawn	9229-27-*C05-N2BE
Raso blue marine / Blue marine silk satin	9229-27-*C11-N2BE
Raso malva / Mauve silk satin	9229-27-*C12-N2BE
Raso fango / Fango silk satin	9229-27-*C14-N2BE
Raso madreperla / Pearl silk satin	9229-27-*C15-N2BE

Sostituire l'asterisco presente nel codice con il carattere corrispondente indicato nella legenda e aggiungere il relativo prezzo. / Replace the asterisk in the code with the corresponding character indicated in the legend and add the respective price.

Dettagli Details	Legenda Legend
3xE27	*3
3xE27+chiusura PVC bianco/white PVC closure	*T

Accessori Accessories	Codice Code
Lampadina / Bulb LED E27 - 2700K	RIC.000088

SOSPENSIONI TESSUTO

9229-28
CYLINDER Ø60 SUSPENSION

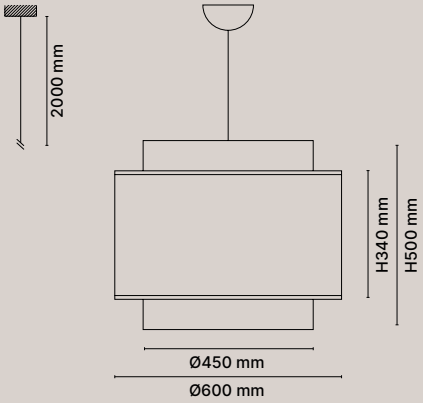

Peso / Weight: 3,0 kg

Dettagli
Details

1× 13W LED - E27
IP20

Tessuti Cat. A /
Fabrics Cat. A
Tessuti Cat. B /
Fabrics Cat. B
Tessuti Cat. Extra /
Fabrics Cat. Extra

Paralume interno bianco /
White inner shade

P. 114

Tessuti Fabrics	Codice Code
Cotone bianco / White cotton	9229-28-0B01-N2BE
Cotone beige / Beige cotton	9229-28-0B02-N2BE
Cotone marrone / Brown cotton	9229-28-0B03-N2BE
Cotone amaranto / Reddish purple cotton	9229-28-0B04-N2BE
Cotone verde bottiglia / Bottle green cotton	9229-28-0B05-N2BE
Pergamena bianco / White parchment	9229-28-0B11-N2BE
Seta bianco / White silk	9229-28-0A01-N2BE
Seta nero / Black silk	9229-28-0A02-N2BE
Seta avorio / Ivory silk	9229-28-0A03-N2BE
Seta ambra / Amber silk	9229-28-0A04-N2BE
Seta tabacco / Tobacco silk	9229-28-0A05-N2BE
Seta rosso / Red silk	9229-28-0A06-N2BE
Seta perla / Pearl silk	9229-28-0A07-N2BE
Lino bianco / White linen	9229-28-0A11-N2BE
Lino nero / Black linen	9229-28-0A12-N2BE
Lino sabbia / Sand linen	9229-28-0A13-N2BE
Lino tortora / Tortora linen	9229-28-0A14-N2BE
Lino melone / Melon linen	9229-28-0A15-N2BE
Lino grezzo / Unbleached linen	9229-28-0A16-N2BE
Linone corda / Corda lawn	9229-28-0A21-N2BE
Linone cocco / Cocco lawn	9229-28-0A22-N2BE
Linone melograno / Pomegranate lawn	9229-28-0A23-N2BE
Linone verde lime / Lime green lawn	9229-28-0A24-N2BE
Linone blue denim / Blue denim lawn	9229-28-0A25-N2BE
Linone tabacco / Tobacco lawn	9229-28-0A26-N2BE
Net avorio / Ivory net	9229-28-0A51-N2BE
Raso madreperla / Pearl silk satin	9229-28-0E01-N2BE
Raso fango/ Fango silk satin	9229-28-0E02-N2BE
Raso malva / Mauve silk satin	9229-28-0E03-N2BE
Raso blue marine / Blue marine silk satin	9229-28-0E06-N2BE

Accessori Accessories	Codice Code
Lampadina / Bulb LED E27 - 2700K	RIC.000088

SOSPENSIONI TESSUTO

9229-29
CYLINDER Ø80 SUSPENSION

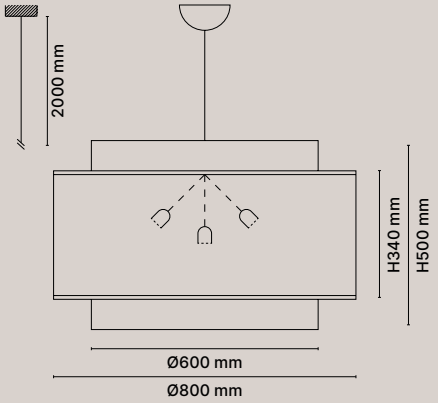

Peso / Weight: 4,0 kg

Dettagli
Details

3× 13W LED - E27
IP20

Tessuti Cat. A /
Fabrics Cat. A
Tessuti Cat. B /
Fabrics Cat. B
Tessuti Cat. Extra /
Fabrics Cat. Extra

Paralume interno bianco /
White inner shade

P. 114

Tessuti Fabrics	Codice Code
Cotone bianco / White cotton	9229-29-0B01-N2BE
Cotone beige / Beige cotton	9229-29-0B02-N2BE
Cotone marrone / Brown cotton	9229-29-0B03-N2BE
Cotone amaranto / Reddish purple cotton	9229-29-0B04-N2BE
Cotone verde bottiglia / Bottle green cotton	9229-29-0B05-N2BE
Pergamena bianco / White parchment	9229-29-0B11-N2BE
Seta bianco / White silk	9229-29-0A01-N2BE
Seta nero / Black silk	9229-29-0A02-N2BE
Seta avorio / Ivory silk	9229-29-0A03-N2BE
Seta ambra / Amber silk	9229-29-0A04-N2BE
Seta tabacco / Tobacco silk	9229-29-0A05-N2BE
Seta rosso / Red silk	9229-29-0A06-N2BE
Seta perla / Pearl silk	9229-29-0A07-N2BE
Lino bianco / White linen	9229-29-0A11-N2BE
Lino nero / Black linen	9229-29-0A12-N2BE
Lino sabbia / Sand linen	9229-29-0A13-N2BE
Lino tortora / Tortora linen	9229-29-0A14-N2BE
Lino melone / Melon linen	9229-29-0A15-N2BE
Lino grezzo / Unbleached linen	9229-29-0A16-N2BE
Linone corda / Corda lawn	9229-29-0A21-N2BE
Linone cocco / Cocco lawn	9229-29-0A22-N2BE
Linone melograno / Pomegranate lawn	9229-29-0A23-N2BE
Linone verde lime / Lime green lawn	9229-29-0A24-N2BE
Linone blue denim / Blue denim lawn	9229-29-0A25-N2BE
Linone tabacco / Tobacco lawn	9229-29-0A26-N2BE
Net avorio / Ivory net	9229-29-0A51-N2BE
Raso madreperla / Pearl silk satin	9229-29-0E01-N2BE
Raso fango/ Fango silk satin	9229-29-0E02-N2BE
Raso malva / Mauve silk satin	9229-29-0E03-N2BE
Raso blue marine / Blue marine silk satin	9229-29-0E06-N2BE

Accessori Accessories	Codice Code
Lampadina / Bulb LED E27 - 2700K	RIC.000088

SOSPENSIONI TESSUTO

0604-20
LOW CYLINDER Ø60 SUSPENSION

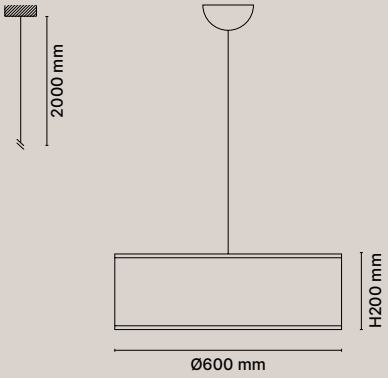

Peso / Weight: 3,5 kg

Dettagli
Details

3× 13W LED - E27
IP20

Tessuti Cat. A /
Fabrics Cat. A
Tessuti Cat. B /
Fabrics Cat. B
Tessuti Cat. Extra /
Fabrics Cat. Extra

Chiusura inferiore totale in plexiglass /
Complete plexiglass bottom closure

P. 114

Tessuti Fabrics	Codice Code
Cotone bianco / White cotton	0604-20-0B01-N2BE
Cotone beige / Beige cotton	0604-20-0B02-N2BE
Cotone marrone / Brown cotton	0604-20-0B03-N2BE
Cotone amaranto / Reddish purple cotton	0604-20-0B04-N2BE
Cotone verde bottiglia / Bottle green cotton	0604-20-0B05-N2BE
Pergamena bianco / White parchment	0604-20-0B11-N2BE
Seta bianco / White silk	0604-20-0A01-N2BE
Seta nero / Black silk	0604-20-0A02-N2BE
Seta avorio / Ivory silk	0604-20-0A03-N2BE
Seta ambra / Amber silk	0604-20-0A04-N2BE
Seta tabacco / Tobacco silk	0604-20-0A05-N2BE
Seta rosso / Red silk	0604-20-0A06-N2BE
Seta perla / Pearl silk	0604-20-0A07-N2BE
Lino bianco / White linen	0604-20-0A11-N2BE
Lino nero / Black linen	0604-20-0A12-N2BE
Lino sabbia / Sand linen	0604-20-0A13-N2BE
Lino tortora / Tortora linen	0604-20-0A14-N2BE
Lino melone / Melon linen	0604-20-0A15-N2BE
Lino grezzo / Unbleached linen	0604-20-0A16-N2BE
Linone corda / Corda lawn	0604-20-0A21-N2BE
Linone cocco / Cocco lawn	0604-20-0A22-N2BE
Linone melograno / Pomegranate lawn	0604-20-0A23-N2BE
Linone verde lime / Lime green lawn	0604-20-0A24-N2BE
Linone blue denim / Blue denim lawn	0604-20-0A25-N2BE
Linone tabacco / Tobacco lawn	0604-20-0A26-N2BE
Net avorio / Ivory net	0604-20-0A51-N2BE
Raso madreperla / Pearl silk satin	0604-20-0E01-N2BE
Raso fango/ Fango silk satin	0604-20-0E02-N2BE
Raso malva / Mauve silk satin	0604-20-0E03-N2BE
Raso blue marine / Blue marine silk satin	0604-20-0E06-N2BE

Accessori Accessories	Codice Code
Lampadina / Bulb LED E27 - 2700K	RIC.000088

SOSPENSIONI TESSUTO

0604-21
LOW CYLINDER Ø80 SUSPENSION

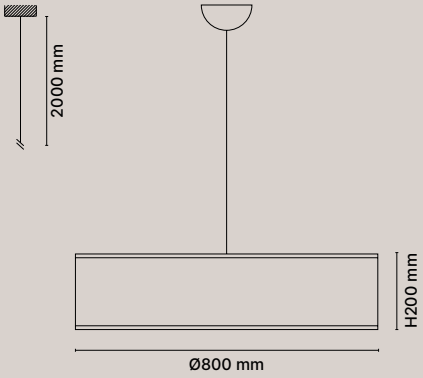

Peso / Weight: 4,0 kg

Dettagli
Details

3× 13W LED - E27
IP20

Tessuti Cat. A /
Fabrics Cat. A
Tessuti Cat. B /
Fabrics Cat. B
Tessuti Cat. Extra /
Fabrics Cat. Extra

Chiusura inferiore totale in plexiglass /
Complete plexiglass bottom closure

P. 114

Tessuti Fabrics	Codice Code
Cotone bianco / White cotton	0604-21-0B01-N2BE
Cotone beige / Beige cotton	0604-21-0B02-N2BE
Cotone marrone / Brown cotton	0604-21-0B03-N2BE
Cotone amaranto / Reddish purple cotton	0604-21-0B04-N2BE
Cotone verde bottiglia / Bottle green cotton	0604-21-0B05-N2BE
Pergamena bianco / White parchment	0604-21-0B11-N2BE
Seta bianco / White silk	0604-21-0A01-N2BE
Seta nero / Black silk	0604-21-0A02-N2BE
Seta avorio / Ivory silk	0604-21-0A03-N2BE
Seta ambra / Amber silk	0604-21-0A04-N2BE
Seta tabacco / Tobacco silk	0604-21-0A05-N2BE
Seta rosso / Red silk	0604-21-0A06-N2BE
Seta perla / Pearl silk	0604-21-0A07-N2BE
Lino bianco / White linen	0604-21-0A11-N2BE
Lino nero / Black linen	0604-21-0A12-N2BE
Lino sabbia / Sand linen	0604-21-0A13-N2BE
Lino tortora / Tortora linen	0604-21-0A14-N2BE
Lino melone / Melon linen	0604-21-0A15-N2BE
Lino grezzo / Unbleached linen	0604-21-0A16-N2BE
Linone corda / Corda lawn	0604-21-0A21-N2BE
Linone cocco / Cocco lawn	0604-21-0A22-N2BE
Linone melograno / Pomegranate lawn	0604-21-0A23-N2BE
Linone verde lime / Lime green lawn	0604-21-0A24-N2BE
Linone blue denim / Blue denim lawn	0604-21-0A25-N2BE
Linone tabacco / Tobacco lawn	0604-21-0A26-N2BE
Net avorio / Ivory net	0604-21-0A51-N2BE
Raso madreperla / Pearl silk satin	0604-21-0E01-N2BE
Raso fango/ Fango silk satin	0604-21-0E02-N2BE
Raso malva / Mauve silk satin	0604-21-0E03-N2BE
Raso blue marine / Blue marine silk satin	0604-21-0E06-N2BE

Accessori Accessories	Codice Code
Lampadina / Bulb LED E27 - 2700K	RIC.000088

SOSPENSIONI TESSUTO

0604-22
LOW CYLINDER Ø100 SUSPENSION

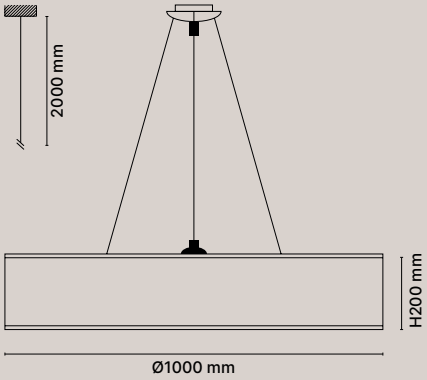

Peso / Weight: 6,0 kg

Dettagli
Details

3× 13W LED - E27
IP20

Tessuti Cat. A /
Fabrics Cat. A
Tessuti Cat. B /
Fabrics Cat. B
Tessuti Cat. Extra /
Fabrics Cat. Extra

Chiusura inferiore totale in plexiglass /
Complete plexiglass bottom closure

P. 114

Tessuti Fabrics	Codice Code
Cotone bianco / White cotton	0604-22-0B01-N2BE
Cotone beige / Beige cotton	0604-22-0B02-N2BE
Cotone marrone / Brown cotton	0604-22-0B03-N2BE
Cotone amaranto / Reddish purple cotton	0604-22-0B04-N2BE
Cotone verde bottiglia / Bottle green cotton	0604-22-0B05-N2BE
Pergamena bianco / White parchment	0604-22-0B11-N2BE
Seta bianco / White silk	0604-22-0A01-N2BE
Seta nero / Black silk	0604-22-0A02-N2BE
Seta avorio / Ivory silk	0604-22-0A03-N2BE
Seta ambra / Amber silk	0604-22-0A04-N2BE
Seta tabacco / Tobacco silk	0604-22-0A05-N2BE
Seta rosso / Red silk	0604-22-0A06-N2BE
Seta perla / Pearl silk	0604-22-0A07-N2BE
Lino bianco / White linen	0604-22-0A11-N2BE
Lino nero / Black linen	0604-22-0A12-N2BE
Lino sabbia / Sand linen	0604-22-0A13-N2BE
Lino tortora / Tortora linen	0604-22-0A14-N2BE
Lino melone / Melon linen	0604-22-0A15-N2BE
Lino grezzo / Unbleached linen	0604-22-0A16-N2BE
Linone corda / Corda lawn	0604-22-0A21-N2BE
Linone cocco / Cocco lawn	0604-22-0A22-N2BE
Linone melograno / Pomegranate lawn	0604-22-0A23-N2BE
Linone verde lime / Lime green lawn	0604-22-0A24-N2BE
Linone blue denim / Blue denim lawn	0604-22-0A25-N2BE
Linone tabacco / Tobacco lawn	0604-22-0A26-N2BE
Net avorio / Ivory net	0604-22-0A51-N2BE
Raso madreperla / Pearl silk satin	0604-22-0E01-N2BE
Raso fango/ Fango silk satin	0604-22-0E02-N2BE
Raso malva / Mauve silk satin	0604-22-0E03-N2BE
Raso blue marine / Blue marine silk satin	0604-22-0E06-N2BE

Accessori Accessories	Codice Code
Lampadina / Bulb LED E27 - 2700K	RIC.000088

SOSPENSIONI TESSUTO

0610-20
HIGH CYLINDER Ø30 SUSPENSION

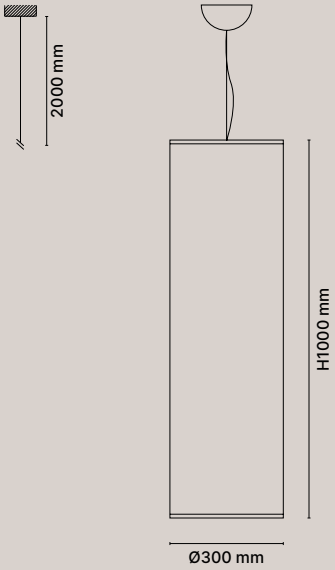

Peso / Weight: 2,0 kg

Dettagli
Details

1× 13W LED - E27
IP20

Tessuti Cat. A /
Fabrics Cat. A
Tessuti Cat. B /
Fabrics Cat. B
Tessuti Cat. Extra /
Fabrics Cat. Extra

P. 114

Tessuti Fabrics	Codice Code
Cotone bianco / White cotton	0610-20-0B01-N2BE
Cotone beige / Beige cotton	0610-20-0B02-N2BE
Cotone marrone / Brown cotton	0610-20-0B03-N2BE
Cotone amaranto / Reddish purple cotton	0610-20-0B04-N2BE
Cotone verde bottiglia / Bottle green cotton	0610-20-0B05-N2BE
Pergamena bianco / White parchment	0610-20-0B11-N2BE
Seta bianco / White silk	0610-20-0A01-N2BE
Seta nero / Black silk	0610-20-0A02-N2BE
Seta avorio / Ivory silk	0610-20-0A03-N2BE
Seta ambra / Amber silk	0610-20-0A04-N2BE
Seta tabacco / Tobacco silk	0610-20-0A05-N2BE
Seta rosso / Red silk	0610-20-0A06-N2BE
Seta perla / Pearl silk	0610-20-0A07-N2BE
Lino bianco / White linen	0610-20-0A11-N2BE
Lino nero / Black linen	0610-20-0A12-N2BE
Lino sabbia / Sand linen	0610-20-0A13-N2BE
Lino tortora / Tortora linen	0610-20-0A14-N2BE
Lino melone / Melon linen	0610-20-0A15-N2BE
Lino grezzo / Unbleached linen	0610-20-0A16-N2BE
Linone corda / Corda lawn	0610-20-0A21-N2BE
Linone cocco / Cocco lawn	0610-20-0A22-N2BE
Linone melograno / Pomegranate lawn	0610-20-0A23-N2BE
Linone verde lime / Lime green lawn	0610-20-0A24-N2BE
Linone blue denim / Blue denim lawn	0610-20-0A25-N2BE
Linone tabacco / Tobacco lawn	0610-20-0A26-N2BE
Net avorio / Ivory net	0610-20-0A51-N2BE
Raso madreperla / Pearl silk satin	0610-20-0E01-N2BE
Raso fango/ Fango silk satin	0610-20-0E02-N2BE
Raso malva / Mauve silk satin	0610-20-0E03-N2BE
Raso blue marine / Blue marine silk satin	0610-20-0E06-N2BE

Accessori Accessories	Codice Code
Lampadina / Bulb LED E27 - 2700K	RIC.000088

SOSPENSIONI TESSUTO

1005-20
SQUARE 60X60 SUSPENSION

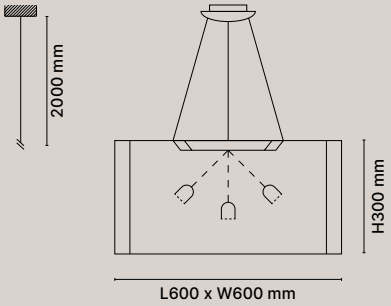

Peso / Weight: 3,5 kg

Dettagli
Details

3× 13W LED - E27
IP20

Tessuti Cat. A /
Fabrics Cat. A
Tessuti Cat. B /
Fabrics Cat. B
Tessuti Cat. Extra /
Fabrics Cat. Extra

Chiusura inferiore totale in plexiglass /
Complete plexiglass bottom closure

P. 114

Tessuti Fabrics	Codice Code
Cotone bianco / White cotton	1005-20-0B01-N2BE
Cotone beige / Beige cotton	1005-20-0B02-N2BE
Cotone marrone / Brown cotton	1005-20-0B03-N2BE
Cotone amaranto / Reddish purple cotton	1005-20-0B04-N2BE
Cotone verde bottiglia / Bottle green cotton	1005-20-0B05-N2BE
Pergamena bianco / White parchment	1005-20-0B11-N2BE
Seta bianco / White silk	1005-20-0A01-N2BE
Seta nero / Black silk	1005-20-0A02-N2BE
Seta avorio / Ivory silk	1005-20-0A03-N2BE
Seta ambra / Amber silk	1005-20-0A04-N2BE
Seta tabacco / Tobacco silk	1005-20-0A05-N2BE
Seta rosso / Red silk	1005-20-0A06-N2BE
Seta perla / Pearl silk	1005-20-0A07-N2BE
Lino bianco / White linen	1005-20-0A11-N2BE
Lino nero / Black linen	1005-20-0A12-N2BE
Lino sabbia / Sand linen	1005-20-0A13-N2BE
Lino tortora / Tortora linen	1005-20-0A14-N2BE
Lino melone / Melon linen	1005-20-0A15-N2BE
Lino grezzo / Unbleached linen	1005-20-0A16-N2BE
Linone corda / Corda lawn	1005-20-0A21-N2BE
Linone cocco / Cocco lawn	1005-20-0A22-N2BE
Linone melograno / Pomegranate lawn	1005-20-0A23-N2BE
Linone verde lime / Lime green lawn	1005-20-0A24-N2BE
Linone blue denim / Blue denim lawn	1005-20-0A25-N2BE
Linone tabacco / Tobacco lawn	1005-20-0A26-N2BE
Net avorio / Ivory net	1005-20-0A51-N2BE
Raso madreperla / Pearl silk satin	1005-20-0E01-N2BE
Raso fango/ Fango silk satin	1005-20-0E02-N2BE
Raso malva / Mauve silk satin	1005-20-0E03-N2BE
Raso blue marine / Blue marine silk satin	1005-20-0E06-N2BE

Accessori Accessories	Codice Code
Lampadina / Bulb LED E27 - 2700K	RIC.000088

SOSPENSIONI TESSUTO

1005-22
SQUARE 80X80 SUSPENSION

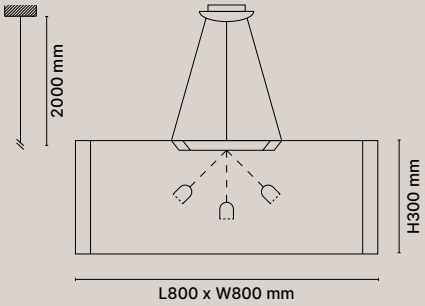

Peso / Weight: 4,0 kg

Dettagli
Details

3× 13W LED - E27
IP20

Tessuti Cat. A /
Fabrics Cat. A
Tessuti Cat. B /
Fabrics Cat. B
Tessuti Cat. Extra /
Fabrics Cat. Extra

Chiusura inferiore totale in plexiglass /
Complete plexiglass bottom closure

P. 114

Tessuti Fabrics	Codice Code
Cotone bianco / White cotton	1005-22-0B01-N2BE
Cotone beige / Beige cotton	1005-22-0B02-N2BE
Cotone marrone / Brown cotton	1005-22-0B03-N2BE
Cotone amaranto / Reddish purple cotton	1005-22-0B04-N2BE
Cotone verde bottiglia / Bottle green cotton	1005-22-0B05-N2BE
Pergamena bianco / White parchment	1005-22-0B11-N2BE
Seta bianco / White silk	1005-22-0A01-N2BE
Seta nero / Black silk	1005-22-0A02-N2BE
Seta avorio / Ivory silk	1005-22-0A03-N2BE
Seta ambra / Amber silk	1005-22-0A04-N2BE
Seta tabacco / Tobacco silk	1005-22-0A05-N2BE
Seta rosso / Red silk	1005-22-0A06-N2BE
Seta perla / Pearl silk	1005-22-0A07-N2BE
Lino bianco / White linen	1005-22-0A11-N2BE
Lino nero / Black linen	1005-22-0A12-N2BE
Lino sabbia / Sand linen	1005-22-0A13-N2BE
Lino tortora / Tortora linen	1005-22-0A14-N2BE
Lino melone / Melon linen	1005-22-0A15-N2BE
Lino grezzo / Unbleached linen	1005-22-0A16-N2BE
Linone corda / Corda lawn	1005-22-0A21-N2BE
Linone cocco / Cocco lawn	1005-22-0A22-N2BE
Linone melograno / Pomegranate lawn	1005-22-0A23-N2BE
Linone verde lime / Lime green lawn	1005-22-0A24-N2BE
Linone blue denim / Blue denim lawn	1005-22-0A25-N2BE
Linone tabacco / Tobacco lawn	1005-22-0A26-N2BE
Net avorio / Ivory net	1005-22-0A51-N2BE
Raso madreperla / Pearl silk satin	1005-22-0E01-N2BE
Raso fango/ Fango silk satin	1005-22-0E02-N2BE
Raso malva / Mauve silk satin	1005-22-0E03-N2BE
Raso blue marine / Blue marine silk satin	1005-22-0E06-N2BE

Accessori Accessories	Codice Code
Lampadina / Bulb LED E27 - 2700K	RIC.000088

SOSPENSIONI TESSUTO

1005-24
SQUARE 100X100 SUSPENSION

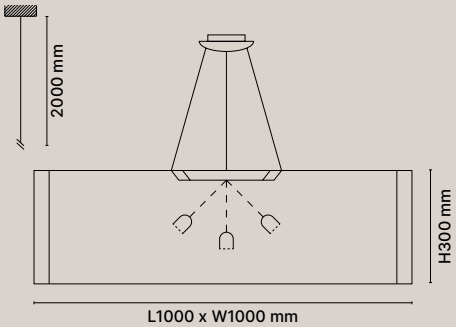

Peso / Weight: 6,0 kg

Dettagli
Details

3× 13W LED - E27
IP20

Tessuti Cat. A /
Fabrics Cat. A
Tessuti Cat. B /
Fabrics Cat. B
Tessuti Cat. Extra /
Fabrics Cat. Extra

Chiusura inferiore totale in plexiglass /
Complete plexiglass bottom closure

P. 114

Tessuti Fabrics	Codice Code
Cotone bianco / White cotton	1005-24-0B01-N2BE
Cotone beige / Beige cotton	1005-24-0B02-N2BE
Cotone marrone / Brown cotton	1005-24-0B03-N2BE
Cotone amaranto / Reddish purple cotton	1005-24-0B04-N2BE
Cotone verde bottiglia / Bottle green cotton	1005-24-0B05-N2BE
Pergamena bianco / White parchment	1005-24-0B11-N2BE
Seta bianco / White silk	1005-24-0A01-N2BE
Seta nero / Black silk	1005-24-0A02-N2BE
Seta avorio / Ivory silk	1005-24-0A03-N2BE
Seta ambra / Amber silk	1005-24-0A04-N2BE
Seta tabacco / Tobacco silk	1005-24-0A05-N2BE
Seta rosso / Red silk	1005-24-0A06-N2BE
Seta perla / Pearl silk	1005-24-0A07-N2BE
Lino bianco / White linen	1005-24-0A11-N2BE
Lino nero / Black linen	1005-24-0A12-N2BE
Lino sabbia / Sand linen	1005-24-0A13-N2BE
Lino tortora / Tortora linen	1005-24-0A14-N2BE
Lino melone / Melon linen	1005-24-0A15-N2BE
Lino grezzo / Unbleached linen	1005-24-0A16-N2BE
Linone corda / Corda lawn	1005-24-0A21-N2BE
Linone cocco / Cocco lawn	1005-24-0A22-N2BE
Linone melograno / Pomegranate lawn	1005-24-0A23-N2BE
Linone verde lime / Lime green lawn	1005-24-0A24-N2BE
Linone blue denim / Blue denim lawn	1005-24-0A25-N2BE
Linone tabacco / Tobacco lawn	1005-24-0A26-N2BE
Net avorio / Ivory net	1005-24-0A51-N2BE
Raso madreperla / Pearl silk satin	1005-24-0E01-N2BE
Raso fango/ Fango silk satin	1005-24-0E02-N2BE
Raso malva / Mauve silk satin	1005-24-0E03-N2BE
Raso blue marine / Blue marine silk satin	1005-24-0E06-N2BE

Accessori Accessories	Codice Code
Lampadina / Bulb LED E27 - 2700K	RIC.000088

TOSCA

0601-01
SMALL TABLE

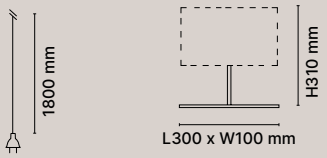

Peso / Weight: 2,8 kg

Dettagli
Details

2× 6W LED - E14
IP20

Paralumi venduti separatamente /
Shades sold separately

Struttura metallo Metal structure	Codice Code
Antracite / Anthracite	0601-01-2900-NXBE

Accessori Accessories	Codice Code
Lampadina / Bulb LED E14 - 2700K	RIC.000087

0601-03
LARGE TABLE

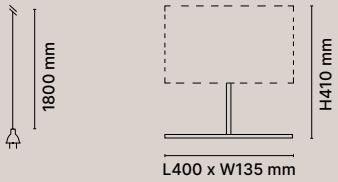

Peso / Weight: 5,0 kg

Dettagli
Details

2× 6W LED - E14
IP20

Paralumi venduti separatamente /
Shades sold separately

Struttura metallo Metal structure	Codice Code
Antracite / Anthracite	0601-03-2900-NXBE

Accessori Accessories	Codice Code
Lampadina / Bulb LED E14 - 2700K	RIC.000087

0601-10
FLOOR

Peso / Weight: 10,0 kg

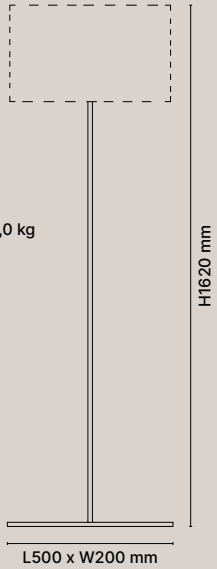

Dettagli
Details

2× 13W LED - E27
IP20
Dimmer on cable

Paralumi venduti separatamente /
Shades sold separately

Struttura metallo Metal structure	Codice Code
Antracite / Anthracite	0601-10-2900-DXBE

Accessori Accessories	Codice Code
Lampadina / Bulb LED E27 - 2700K	RIC.000088

TOSCA

0601-90
LARGE SHADE

Peso / Weight: 0,3 kg

Dettagli
Details

Tessuti Cat. A /
Fabrics Cat. A
Tessuti Cat. B /
Fabrics Cat. B
Tessuti Cat. Extra, Plissè seta a mano /
Fabrics Cat. Extra, Hand made silk plissè

P. 114

Tessuti Fabrics	Codice Code
Cotone bianco / White cotton	0601-90-0B01
Cotone beige / Beige cotton	0601-90-0B02
Cotone marrone / Brown cotton	0601-90-0B03
Cotone amaranto / Reddish purple cotton	0601-90-0B04
Cotone verde bottiglia / Bottle green cotton	0601-90-0B05
Pergamena bianco / White parchment	0601-90-0B11
Seta bianco / White silk	0601-90-0A01
Seta nero / Black silk	0601-90-0A02
Seta avorio / Ivory silk	0601-90-0A03
Seta ambra / Amber silk	0601-90-0A04
Seta tabacco / Tobacco silk	0601-90-0A05
Seta rosso / Red silk	0601-90-0A06
Seta perla / Pearl silk	0601-90-0A07
Lino bianco / White linen	0601-90-0A11
Lino nero / Black linen	0601-90-0A12
Lino sabbia / Sand linen	0601-90-0A13
Lino tortora / Tortora linen	0601-90-0A14
Lino melone / Melon linen	0601-90-0A15
Lino grezzo / Unbleached linen	0601-90-0A16
Linone corda / Corda lawn	0601-90-0A21
Linone cocco / Cocco lawn	0601-90-0A22
Linone melograno / Pomegranate lawn	0601-90-0A23
Linone verde lime / Lime green lawn	0601-90-0A24
Linone blue denim / Blue denim lawn	0601-90-0A25
Linone tabacco / Tobacco lawn	0601-90-0A26
Net avorio / Ivory net	0601-90-0A51
Raso madreperla / Pearl silk satin	0601-90-0E01
Raso fango/ Fango silk satin	0601-90-0E02
Raso malva / Mauve silk satin	0601-90-0E03
Raso blue marine / Blue marine silk satin	0601-90-0E06
Plissè seta bianco / White silk plissè	0601-90-0E11
Plissè seta avorio / Ivory silk plissè	0601-90-0E12
Plissè seta grigio / Grey silk plissè	0601-90-0E13
Plissè seta fumo di Londra / London smoke silk plissè	0601-90-0E14
Plissè seta tabacco / Tobacco silk plissè	0601-90-0E15

TOSCA

0601-91
SMALL SHADE

Peso / Weight: 0,3 kg

Dettagli Details	Tessuti Fabrics	Codice Code
Tessuti Cat. A / Fabrics Cat. A Tessuti Cat. B / Fabrics Cat. B Tessuti Cat. Extra, Plissè seta a mano / Fabrics Cat. Extra, Hand made silk plissè	Cotone bianco / White cotton	0601-91-0B01
	Cotone beige / Beige cotton	0601-91-0B02
	Cotone marrone / Brown cotton	0601-91-0B03
	Cotone amaranto / Reddish purple cotton	0601-91-0B04
	Cotone verde bottiglia / Bottle green cotton	0601-91-0B05
	Pergamena bianco / White parchment	0601-91-0B11
	Seta bianco / White silk	0601-91-0A01
	Seta nero / Black silk	0601-91-0A02
	Seta avorio / Ivory silk	0601-91-0A03
	Seta ambra / Amber silk	0601-91-0A04
	Seta tabacco / Tobacco silk	0601-91-0A05
	Seta rosso / Red silk	0601-91-0A06
	Seta perla / Pearl silk	0601-91-0A07
	Lino bianco / White linen	0601-91-0A11
	Lino nero / Black linen	0601-91-0A12
	Lino sabbia / Sand linen	0601-91-0A13
	Lino tortora / Tortora linen	0601-91-0A14
	Lino melone / Melon linen	0601-91-0A15
	Lino grezzo / Unbleached linen	0601-91-0A16
	Linone corda / Corda lawn	0601-91-0A21
	Linone cocco / Cocco lawn	0601-91-0A22
	Linone melograno / Pomegranate lawn	0601-91-0A23
	Linone verde lime / Lime green lawn	0601-91-0A24
	Linone blue denim / Blue denim lawn	0601-91-0A25
	Linone tabacco / Tobacco lawn	0601-91-0A26
	Net avorio / Ivory net	0601-91-0A51
	Raso madreperla / Pearl silk satin	0601-91-0E01
	Raso fango/ Fango silk satin	0601-91-0E02
	Raso malva / Mauve silk satin	0601-91-0E03
	Raso blue marine / Blue marine silk satin	0601-91-0E06
	Plissè seta bianco / White silk plissè	0601-91-0E11
	Plissè seta avorio / Ivory silk plissè	0601-91-0E12
	Plissè seta grigio / Grey silk plissè	0601-91-0E13
	Plissè seta fumo di Londra / London smoke silk plissè	0601-91-0E14
	Plissè seta tabacco / Tobacco silk plissè	0601-91-0E15

P. 114

TOSCA

0601-92
FLOOR SHADE

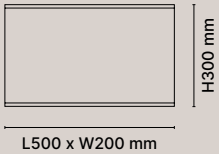

Peso / Weight: 0,8 kg

Dettagli
Details

Tessuti Cat. A /
Fabrics Cat. A
Tessuti Cat. B /
Fabrics Cat. B
Tessuti Cat. Extra, Plissè seta a mano /
Fabrics Cat. Extra, Hand made silk plissè

P. 114

Tessuti Fabrics	Codice Code
Cotone bianco / White cotton	0601-92-0B01
Cotone beige / Beige cotton	0601-92-0B02
Cotone marrone / Brown cotton	0601-92-0B03
Cotone amaranto / Reddish purple cotton	0601-92-0B04
Cotone verde bottiglia / Bottle green cotton	0601-92-0B05
Pergamena bianco / White parchment	0601-92-0B11
Seta bianco / White silk	0601-92-0A01
Seta nero / Black silk	0601-92-0A02
Seta avorio / Ivory silk	0601-92-0A03
Seta ambra / Amber silk	0601-92-0A04
Seta tabacco / Tobacco silk	0601-92-0A05
Seta rosso / Red silk	0601-92-0A06
Seta perla / Pearl silk	0601-92-0A07
Lino bianco / White linen	0601-92-0A11
Lino nero / Black linen	0601-92-0A12
Lino sabbia / Sand linen	0601-92-0A13
Lino tortora / Tortora linen	0601-92-0A14
Lino melone / Melon linen	0601-92-0A15
Lino grezzo / Unbleached linen	0601-92-0A16
Linone corda / Corda lawn	0601-92-0A21
Linone cocco / Cocco lawn	0601-92-0A22
Linone melograno / Pomegranate lawn	0601-92-0A23
Linone verde lime / Lime green lawn	0601-92-0A24
Linone blue denim / Blue denim lawn	0601-92-0A25
Linone tabacco / Tobacco lawn	0601-92-0A26
Net avorio / Ivory net	0601-92-0A51
Raso madreperla / Pearl silk satin	0601-92-0E01
Raso fango/ Fango silk satin	0601-92-0E02
Raso malva / Mauve silk satin	0601-92-0E03
Raso blue marine / Blue marine silk satin	0601-92-0E06
Plissè seta bianco / White silk plissè	0601-92-0E11
Plissè seta avorio / Ivory silk plissè	0601-92-0E12
Plissè seta grigio / Grey silk plissè	0601-92-0E13
Plissè seta fumo di Londra / London smoke silk plissè	0601-92-0E14
Plissè seta tabacco / Tobacco silk plissè	0601-92-0E15

VANITY

9540-31
LARGE RECTANGULAR WALL

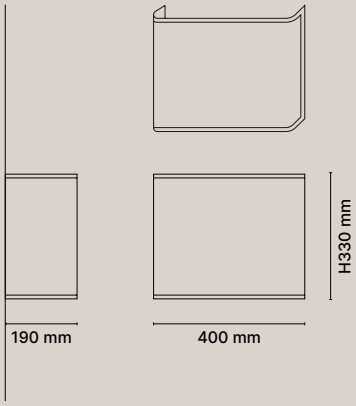

Peso / Weight: 0,9 kg

Dettagli
Details

1× 13W LED - E27
IP20

Tessuti Cat. A /
Fabrics Cat. A
Tessuti Cat. B /
Fabrics Cat. B
Tessuti Cat. Extra, Plissè seta a mano /
Fabrics Cat. Extra, Hand made silk plissè

P. 114

Tessuti Fabrics	Codice Code
Cotone bianco / White cotton	9540-31-0B01-NXBE
Cotone beige / Beige cotton	9540-31-0B02-NXBE
Cotone marrone / Brown cotton	9540-31-0B03-NXBE
Cotone amaranto / Reddish purple cotton	9540-31-0B04-NXBE
Cotone verde bottiglia / Bottle green cotton	9540-31-0B05-NXBE
Pergamena bianco / White parchment	9540-31-0B11-NXBE
Seta bianco / White silk	9540-31-0A01-NXBE
Seta nero / Black silk	9540-31-0A02-NXBE
Seta avorio / Ivory silk	9540-31-0A03-NXBE
Seta ambra / Amber silk	9540-31-0A04-NXBE
Seta tabacco / Tobacco silk	9540-31-0A05-NXBE
Seta rosso / Red silk	9540-31-0A06-NXBE
Seta perla / Pearl silk	9540-31-0A07-NXBE
Lino bianco / White linen	9540-31-0A11-NXBE
Lino nero / Black linen	9540-31-0A12-NXBE
Lino sabbia / Sand linen	9540-31-0A13-NXBE
Lino tortora / Tortora linen	9540-31-0A14-NXBE
Lino melone / Melon linen	9540-31-0A15-NXBE
Lino grezzo / Unbleached linen	9540-31-0A16-NXBE
Linone corda / Corda lawn	9540-31-0A21-NXBE
Linone cocco / Cocco lawn	9540-31-0A22-NXBE
Linone melograno / Pomegranate lawn	9540-31-0A23-NXBE
Linone verde lime / Lime green lawn	9540-31-0A24-NXBE
Linone blue denim / Blue denim lawn	9540-31-0A25-NXBE
Linone tabacco / Tobacco lawn	9540-31-0A26-NXBE
Net avorio / Ivory net	9540-31-0A51-NXBE
Raso madreperla / Pearl silk satin	9540-31-0E01-NXBE
Raso fango/ Fango silk satin	9540-31-0E02-NXBE
Raso malva / Mauve silk satin	9540-31-0E03-NXBE
Raso blue marine / Blue marine silk satin	9540-31-0E06-NXBE
Plissè seta bianco / White silk plissè	9540-31-0E11-NXBE
Plissè seta avorio / Ivory silk plissè	9540-31-0E12-NXBE
Plissè seta grigio / Grey silk plissè	9540-31-0E13-NXBE
Plissè seta fumo di Londra / London smoke silk plissè	9540-31-0E14-NXBE
Plissè seta tabacco / Tobacco silk plissè	9540-31-0E15-NXBE

Accessori Accessories	Codice Code
Lampadina / Bulb LED E27 - 2700K	RIC.000088

VANITY

9540-30
SMALL RECTANGULAR WALL

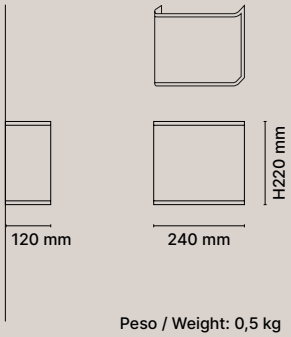

Peso / Weight: 0,5 kg

Dettagli
Details

1× 6W LED - E14
IP20

Tessuti Cat. A /
Fabrics Cat. A
Tessuti Cat. B /
Fabrics Cat. B
Tessuti Cat. Extra, Plissè seta a mano /
Fabrics Cat. Extra, Hand made silk plissè

P. 114

Tessuti Fabrics	Codice Code
Cotone bianco / White cotton	9540-30-0B01-NXBE
Cotone beige / Beige cotton	9540-30-0B02-NXBE
Cotone marrone / Brown cotton	9540-30-0B03-NXBE
Cotone amaranto / Reddish purple cotton	9540-30-0B04-NXBE
Cotone verde bottiglia / Bottle green cotton	9540-30-0B05-NXBE
Pergamena bianco / White parchment	9540-30-0B11-NXBE
Seta bianco / White silk	9540-30-0A01-NXBE
Seta nero / Black silk	9540-30-0A02-NXBE
Seta avorio / Ivory silk	9540-30-0A03-NXBE
Seta ambra / Amber silk	9540-30-0A04-NXBE
Seta tabacco / Tobacco silk	9540-30-0A05-NXBE
Seta rosso / Red silk	9540-30-0A06-NXBE
Seta perla / Pearl silk	9540-30-0A07-NXBE
Lino bianco / White linen	9540-30-0A11-NXBE
Lino nero / Black linen	9540-30-0A12-NXBE
Lino sabbia / Sand linen	9540-30-0A13-NXBE
Lino tortora / Tortora linen	9540-30-0A14-NXBE
Lino melone / Melon linen	9540-30-0A15-NXBE
Lino grezzo / Unbleached linen	9540-30-0A16-NXBE
Linone corda / Corda lawn	9540-30-0A21-NXBE
Linone cocco / Cocco lawn	9540-30-0A22-NXBE
Linone melograno / Pomegranate lawn	9540-30-0A23-NXBE
Linone verde lime / Lime green lawn	9540-30-0A24-NXBE
Linone blue denim / Blue denim lawn	9540-30-0A25-NXBE
Linone tabacco / Tobacco lawn	9540-30-0A26-NXBE
Net avorio / Ivory net	9540-30-0A51-NXBE
Raso madreperla / Pearl silk satin	9540-30-0E01-NXBE
Raso fango/ Fango silk satin	9540-30-0E02-NXBE
Raso malva / Mauve silk satin	9540-30-0E03-NXBE
Raso blue marine / Blue marine silk satin	9540-30-0E06-NXBE
Plissè seta bianco / White silk plissè	9540-30-0E11-NXBE
Plissè seta avorio / Ivory silk plissè	9540-30-0E12-NXBE
Plissè seta grigio / Grey silk plissè	9540-30-0E13-NXBE
Plissè seta fumo di Londra / London smoke silk plissè	9540-30-0E14-NXBE
Plissè seta tabacco / Tobacco silk plissè	9540-30-0E15-NXBE

Accessori Accessories	Codice Code
Lampadina / Bulb LED E14 - 2700K	RIC.000087

VANITY

9540-33
LARGE ROUND WALL

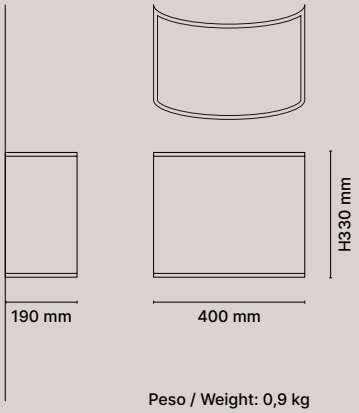

Peso / Weight: 0,9 kg

Dettagli
Details

1× 13W LED - E27
IP20

Tessuti Cat. A /
Fabrics Cat. A
Tessuti Cat. B /
Fabrics Cat. B
Tessuti Cat. Extra, Plissè seta a mano /
Fabrics Cat. Extra, Hand made silk plissè

P. 114

Tessuti Fabrics	Codice Code
Cotone bianco / White cotton	9540-33-0B01-NXBE
Cotone beige / Beige cotton	9540-33-0B02-NXBE
Cotone marrone / Brown cotton	9540-33-0B03-NXBE
Cotone amaranto / Reddish purple cotton	9540-33-0B04-NXBE
Cotone verde bottiglia / Bottle green cotton	9540-33-0B05-NXBE
Pergamena bianco / White parchment	9540-33-0B11-NXBE
Seta bianco / White silk	9540-33-0A01-NXBE
Seta nero / Black silk	9540-33-0A02-NXBE
Seta avorio / Ivory silk	9540-33-0A03-NXBE
Seta ambra / Amber silk	9540-33-0A04-NXBE
Seta tabacco / Tobacco silk	9540-33-0A05-NXBE
Seta rosso / Red silk	9540-33-0A06-NXBE
Seta perla / Pearl silk	9540-33-0A07-NXBE
Lino bianco / White linen	9540-33-0A11-NXBE
Lino nero / Black linen	9540-33-0A12-NXBE
Lino sabbia / Sand linen	9540-33-0A13-NXBE
Lino tortora / Tortora linen	9540-33-0A14-NXBE
Lino melone / Melon linen	9540-33-0A15-NXBE
Lino grezzo / Unbleached linen	9540-33-0A16-NXBE
Linone corda / Corda lawn	9540-33-0A21-NXBE
Linone cocco / Cocco lawn	9540-33-0A22-NXBE
Linone melograno / Pomegranate lawn	9540-33-0A23-NXBE
Linone verde lime / Lime green lawn	9540-33-0A24-NXBE
Linone blue denim / Blue denim lawn	9540-33-0A25-NXBE
Linone tabacco / Tobacco lawn	9540-33-0A26-NXBE
Net avorio / Ivory net	9540-33-0A51-NXBE
Raso madreperla / Pearl silk satin	9540-33-0E01-NXBE
Raso fango/ Fango silk satin	9540-33-0E02-NXBE
Raso malva / Mauve silk satin	9540-33-0E03-NXBE
Raso blue marine / Blue marine silk satin	9540-33-0E06-NXBE
Plissè seta bianco / White silk plissè	9540-33-0E11-NXBE
Plissè seta avorio / Ivory silk plissè	9540-33-0E12-NXBE
Plissè seta grigio / Grey silk plissè	9540-33-0E13-NXBE
Plissè seta fumo di Londra / London smoke silk plissè	9540-33-0E14-NXBE
Plissè seta tabacco / Tobacco silk plissè	9540-33-0E15-NXBE

Accessori Accessories	Codice Code
Lampadina / Bulb LED E27 - 2700K	RIC.000088

VANITY

9540-32
SMALL ROUND WALL LAMP

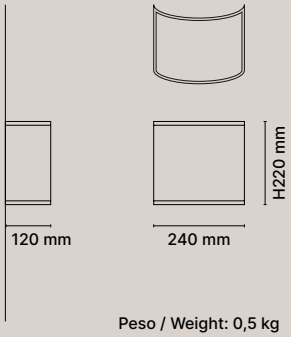

Peso / Weight: 0,5 kg

Dettagli
Details

1× 6W LED - E14
IP20

Tessuti Cat. A /
Fabrics Cat. A
Tessuti Cat. B /
Fabrics Cat. B
Tessuti Cat. Extra, Plissè seta a mano /
Fabrics Cat. Extra, Hand made silk plissè

P. 114

Tessuti Fabrics	Codice Code
Cotone bianco / White cotton	9540-32-0B01-NXBE
Cotone beige / Beige cotton	9540-32-0B02-NXBE
Cotone marrone / Brown cotton	9540-32-0B03-NXBE
Cotone amaranto / Reddish purple cotton	9540-32-0B04-NXBE
Cotone verde bottiglia / Bottle green cotton	9540-32-0B05-NXBE
Pergamena bianco / White parchment	9540-32-0B11-NXBE
Seta bianco / White silk	9540-32-0A01-NXBE
Seta nero / Black silk	9540-32-0A02-NXBE
Seta avorio / Ivory silk	9540-32-0A03-NXBE
Seta ambra / Amber silk	9540-32-0A04-NXBE
Seta tabacco / Tobacco silk	9540-32-0A05-NXBE
Seta rosso / Red silk	9540-32-0A06-NXBE
Seta perla / Pearl silk	9540-32-0A07-NXBE
Lino bianco / White linen	9540-32-0A11-NXBE
Lino nero / Black linen	9540-32-0A12-NXBE
Lino sabbia / Sand linen	9540-32-0A13-NXBE
Lino tortora / Tortora linen	9540-32-0A14-NXBE
Lino melone / Melon linen	9540-32-0A15-NXBE
Lino grezzo / Unbleached linen	9540-32-0A16-NXBE
Linone corda / Corda lawn	9540-32-0A21-NXBE
Linone cocco / Cocco lawn	9540-32-0A22-NXBE
Linone melograno / Pomegranate lawn	9540-32-0A23-NXBE
Linone verde lime / Lime green lawn	9540-32-0A24-NXBE
Linone blue denim / Blue denim lawn	9540-32-0A25-NXBE
Linone tabacco / Tobacco lawn	9540-32-0A26-NXBE
Net avorio / Ivory net	9540-32-0A51-NXBE
Raso madreperla / Pearl silk satin	9540-32-0E01-NXBE
Raso fango/ Fango silk satin	9540-32-0E02-NXBE
Raso malva / Mauve silk satin	9540-32-0E03-NXBE
Raso blue marine / Blue marine silk satin	9540-32-0E06-NXBE
Plissè seta bianco / White silk plissè	9540-32-0E11-NXBE
Plissè seta avorio / Ivory silk plissè	9540-32-0E12-NXBE
Plissè seta grigio / Grey silk plissè	9540-32-0E13-NXBE
Plissè seta fumo di Londra / London smoke silk plissè	9540-32-0E14-NXBE
Plissè seta tabacco / Tobacco silk plissè	9540-32-0E15-NXBE

Accessori Accessories	Codice Code
Lampadina / Bulb LED E14 - 2700K	RIC.000087

TESSUTI / FABRICS

CATEGORIA EXTRA / CLASS EXTRA

Raso di seta / Silk satin

Blu Marine / Blue Marine | Fango | Madreperla / Pearl | Malva / Mauve

Plissè seta a mano / Hand-made silk plissè

Avorio / Ivory | Bianco / White | Fumo di Londra / London smoke | Grigio / Grey | Tabacco / Tobacco

CATEGORIA A / CLASS A

Seta / Silk

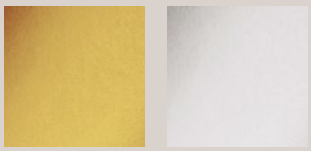

Ambra / Amber | Avorio / Ivory | Bianco / White | Nero / Black | Rosso / Red | Tabacco / Tobacco | Perla / Pearl

Net

Avorio / Ivory

Lino / Linen

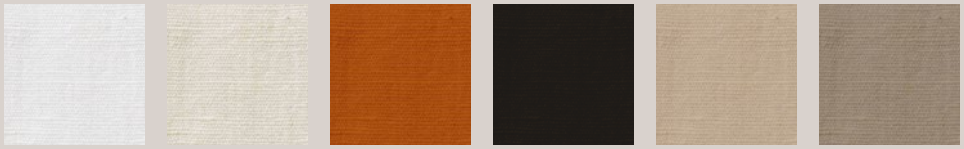

Bianco / White | Grezzo / Unbleached | Melone | Nero / Black | Sabbia / Sand | Tortora

Linone / Lawn

Blu Denim / Blue Denim | Cocco / Coco | Corda / Cord | Melograno / Pomegranate | Tabacco / Tobacco | Verde Lime / Lime green

CATEGORIA B / CLASS B

Cotone / Cotton

Amaranto / Reddish purple | Beige | Bianco / White | Marrone / Brown | Verde bottiglia / Bottle Green

Pergamena / Parchment

Bianco / White

PVC per chiusure / closure

Bianco / White

CATEGORIA CLUB HOUSE / CLASS CLUB HOUSE

Linone / Lawn

Blu Denim / Blue Denim | Cocco / Coco | Corda / Cord | Melograno / Pomegranate | Verde Lime / Lime green

Raso di seta / Silk satin

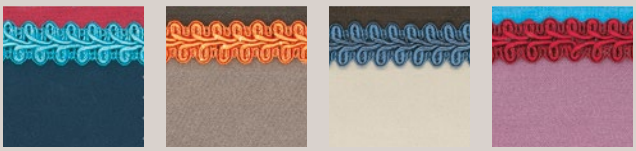

Blu Marine / Blue Marine | Fango | Madreperla / Pearl | Malva / Mauve

Cavo elettrico in cotone colorato / Electrical cable in cotton colour

Blu / Blue | Arancio / Orange | Turchese / Turquoise | Turchese / Turquoise | Arancio / Orange | Blu / Blue | Arancio / Orange | Turchese / Turquoise | Turchese / Turquoise

CHIAVI DI LETTURA / KEYS

4.5W - 230V - E14 LED dimmable - 2700K - 470lm

7W - 230V - E27 LED dimmable - 2700K - 806lm

Lampadina esclusa/ Bulb not included

Dimmer integrato su cavo o su lampada /
Dimmer included on cable or lamp

CLASSI DI ISOLAMENTO /
LUMINAIRES CLASSIFICATION

Classe I: Lampada la cui protezione contro la scarica elettrica non si basa solo sull'isolamento di base dell'apparecchio, ma su un ulteriore sistema di sicurezza che consiste nel collegamento dei componenti conduttivi accessibili a un conduttore di sicurezza (messa a terra) facente parte dell'impianto elettrico fisso.
Class I: Luminaire in which protection against electrical shocks is not just based on the basic insulation of the appliance but on an additional safety system that consists in connecting the conductive components accessible to a safety conductor (earthed) that is part of the fixed electrical system.

Classe II: Lampada la cui protezione contro la scarica elettrica non si basa solo sull'isolamento di base dell'apparecchio, ma su un ulteriore misura di sicurezza che consiste in un doppio isolamen-to rinforzato senza dispositivi per la messa a terra.
Class II: Luminaire in which protection against electrical shocks is not just based on the basic insulation but also on additional safety precau-tions consisting of double reinforced insulation without conductive parts to a safety conductor (earth).

LAMPADINE / BULBS

Le lampadine selezionate da noi sono state accuratamente scelte per garantire una temperatura di colore uniforme e bilanciata, ideale anche per valorizzare le nostre composizioni, assicurando un'illuminazione di qualità.
The bulbs selected by us have been carefully chosen to ensure a uniform and balanced colour temperature, ideal for enhancing our compositions and ensuring quality lighting.

DIMMER

DIMMER: apparecchio con dimmer integrato sul corpo lampada o sul cavo (push button, touch, slider control, microswitch)
DIMMER: dimmable fixture by means of a switch situated on the lamp structure or on cable (push button, touch, slider control, microswitch)

INFORMATION

PENTA srl aderisce al Consorzio Ecolight per l'attuazione delle direttive WEEE/RAEE 2002/95/CE e 2003/108/CE relative alla raccolta e smaltimento delle apparecchiature di illuminazione.
Penta srl takes part in Consorzio Ecolight for the implementation of directive WEEE/RAEE 2002/95/CE e 2003/1087/CE relating to the collection and disposal of light fittings.

SISTEMA DI GESTIONE
QUALITÀ CERTIFICATA
AZIENDA CERTIFICATA

La carta utilizzata è completamente biodegradabile e riciclabile.
The paper used is completely biodegradable and recyclable.

Per installazioni multiple si consiglia di utilizzare lampadine con medesima temperatura di colore (CCT).
For multiple installations it is recommended to use bulbs with the same Correlated Color Temperature (CCT).

Per i dati aggiornati fare riferimento al sito www.pentalight.com
For updated data please refer to www.pentalight.com

I vetri realizzati rigorosamente a mano dal maestro vetraio rispettano le antiche e tradizionali tecniche di soffiatura. Ogni articolo è sottoposto a me-ticolosi controlli di qualità, pertanto apparenti difetti come bolle o variazioni dei toni di colore del vetro, sono riconosciuti come pregi e conferma della lavorazione artigianale.
The glass is hand made and mouth-blown by the master glass blower, accor-ding to the traditional blowing techniques. Each item is carefully checked, the-refore apparent imperfections, such as bubbles or nuances in the glass colour, have to be recognised as merits and signs of the artisan's craftsmanship.

Penta si riserva il diritto di apportare ai propri modelli, senza alcun preavviso, modifiche e migliorie che potrebbero variare l'estetica delle soluzioni pensate.
Penta reserves the right to change, better and improve its models without notice, even if these improvements might change the aesthetic appearance of the proposed solutions.

GRÜN
BECK
DESIGNERS & INTERIORS

interior architects | design stores
all in one service | cabinet maker
Margaretenstr.93 | A-1050 Wien
interiors@gruenbeck.co.at
+43 1 544 83 39

PENTA

AURALIS

PENTA Srl
Via Trieste snc, 20821 Meda (MB) Italy
T +39 0362 1869300
pentalight.com — info@pentalight.it